HEINNER

TRADITIONAL COOKER HOOD

Model: CH-201WH



- Traditional cooker hood
- Suction power: 209.7 m³/h
- Color: white

www.heinner.ro

Thank you for purchasing this product!

I. INTRODUCTION

Before using the appliance, please read carefully this instruction manual and keep it for future reference.

This instruction manual is designed to provide you with all required instructions related to the installation, use and maintenance of the appliance.

In order to operate the unit correctly and safety, please read this instruction manual carefully before installation and usage.

II. CONTENT OF YOUR PACKAGE

- **Traditional cooker hood**
- **User manual**
- **Warranty card**

III. SAFETY PRECAUTIONS

If this product has arrived damaged please return for change or repair.
DO NOT INSTALL THIS APPILANCE IF YOU FOUND IT DANAGED.
Children should be supervised to ensure that they do not play with the appliance.
This appliance is designed for domestic use only.
Any installation work must be carried out by a qualified electrician or competent person.
There is a fire risk if cleaning is not carried out in accordance with the instructions.
Details concerning the method and frequency of cleaning are stated in the section .
“INSTALLATION AND MAINTENANCE”.
Do not pull on the connection cord, but rather on the plug, to separate the appliance from the mains.
When cleaning the appliance, it must be off power first.

IV. INSTALATION

MOUNTING OF THE V-FLAP

If the cooker hood does not have an assembled V-flap 1, you should mount the half-parts to its body.The images only show an example of how to mount the V-flap,the outlet may be various according to different models and configuration.

To mount the V-flap 1 you should:

- Mount two half-parts 2 into the body 6
- a pin 3 should be top oriented;
- the axis 4 should be inserted in the holes 5 on body;
- repeat all the operations for the 2nd half-part

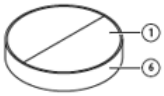

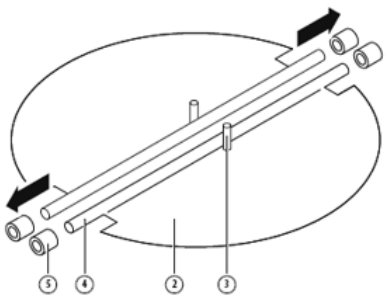

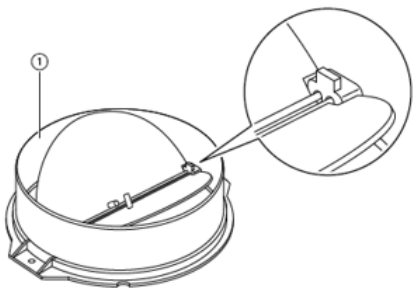

Before installation, turn the unit off and unplug it from the outlet.

INSTALATION

Method A

1. The cooker hoods should be placed at a distance of 65-75cm from the cooking surface for best effect.
2. To install onto the wall, drill 4 holes of Ø 8mm on a suitable place according with the center distance of hole in the back of the cooker hood.
3. Insert the nut into the holes.
4. Insert the screws into the nuts and tight.
5. Put up the cooker hood onto the fixed screws.
6. Then use the attached accessories enclosed to turn the screws into the two holes of inside the hood, and then fix the screws to tighten the hood onto the wall.
7. Put the one way valve onto the cooker hood.

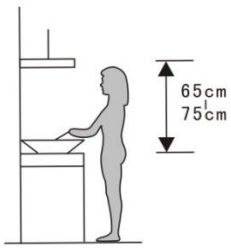

Pic 1

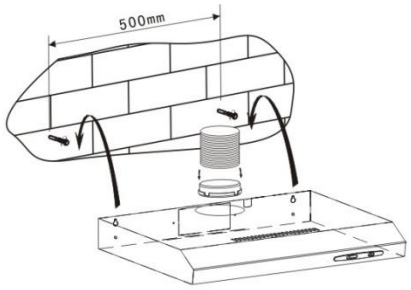

Pic 2

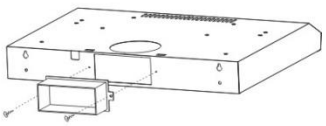

Pic 3

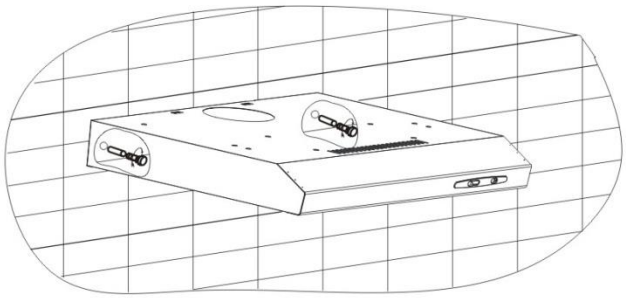

Pic 4

Method B

1) Drill 4 holes of Ø 6mm at the bottom of the hanging Cup board.

2) Put the one way valve on the cooker hood, then install the cooker hood on the bottom of the cupboard, tighten the hood with enclosed 4 screws.

3) Install the adjusted board on the bottom of the hood in order to keep out the gap between hood back and cupboard.

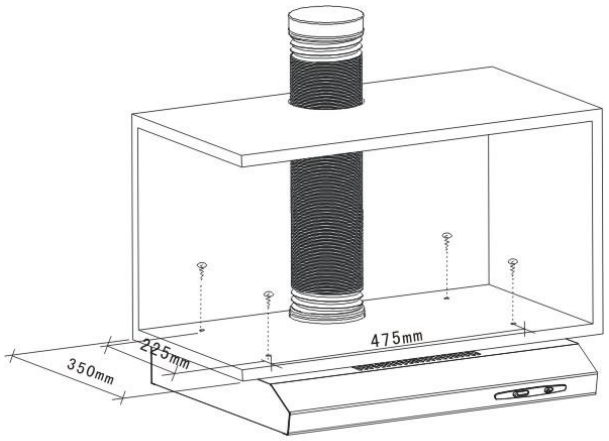

Pic 5

Notice

There are 2 methods for ventilation, including 'horizontal ventilation' and 'vertical ventilation'. Please pay attention to the ventilation method when installation.

Vertical ventilation: As shown in pic 6A, please use the cover to seal the outlet on the back, then the air can be vented from top.

Horizontal ventilation: As shown in pic. 6B, please use the cover to seal the outlet on the top, then the air can be vented from back.

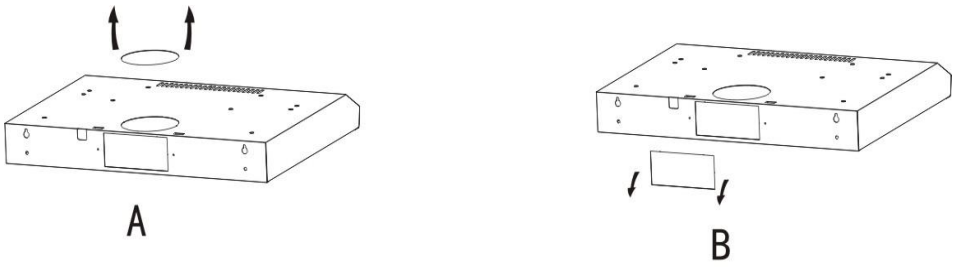

Pic 6

Air ventilation setting

Outdoor air ventilation: Turn the adjuster to outdoor position (pic. 7A), install the outlet, turn on the cooker hood, then the air will be vented from the outside outlet (pic. 7C).

Indoor air ventilation: Turn the adjuster to indoor position (pic. B), install the outlet cover, turn on the cooker hood, then the air can be vented from the inside outlet (pic. 7D).

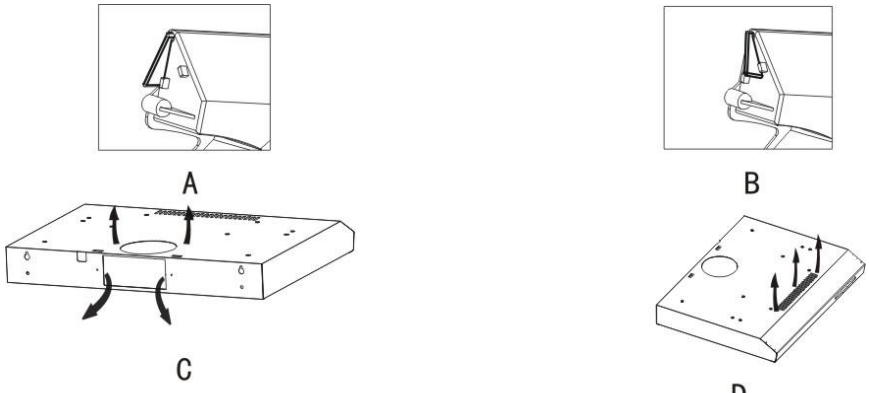

Pic 7

	For safety reason, please use only the same size of fixing or mounting screw which are recommended in this instruction manual. Failure to install the screws or fixing devide in accordance with these instructions may result in electrical hazards.

V. OPERATION

The switch is operated as below:

1. Press stop button, the motor will stop.
2. Press the button to “low”, “middle” and “high”, the motor will be turned on at “low”, “middle” and “high” speed respectively.
3. Press “light”, the light will be on. Press it again, the light will be off.

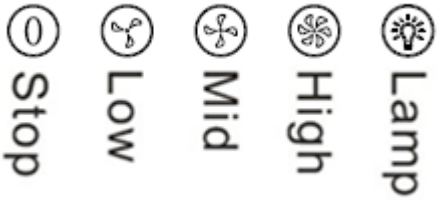

VI. TROUBLESHOOTING

FAULT	POSSIBLE CAUSE	SOLUTION
Light on, but motor does not work	Fan switched turned off	Select a fan switch position
	Fan switch failed	Contact service center
	Motor failed	Contact service center
Light does not work, motor does not work	House fuses blown	Reset/Replace fuses
	Power cord loose or disconnected	Refit cord to power outlet. Switch power outlet on.
Oil leakage	One-way valve and the air ventilation entrance are not tightly sealed	Take down the one-way valve and seal with sealant.
	Leakage from the connection of U-shaped section and cover	Take U-shaped section down and seal.
Lights not working	Broken/Faulty globes	Replace globes as per this instruction.
Insufficient suction	The distance between the cooker hood and the gas top is too far	Refit the cooker hood to the correct distance.
The cooker hood inclines	The fixing screw not tight enough	Tighten the hanging screw and make it horizontal

NOTE: Any electrical repairs to this appliance must conform to your local, state and federal laws. Please contact the service centre if in any doubt before undertaking any of the above. Always disconnect the unit from the power source when opening the unit.

VII. CLEANING AND MAINTENANCE

CAUTION

Before maintenance or cleaning is carried out, the cooker hood should be disconnected from the main supply. Ensure that the cooker hood is switched off at the wall socket and the plug removed.

External surfaces are susceptible to scratches and abrasions, so please follow the cleaning instructions to ensure the best possible result is achieved without damage.

GENERAL

Cleaning and maintenance should be carried out with the appliance cold especially when cleaning. Avoid leaving alkaline or acid substances (lemon juice, vinegar etc.) on the surfaces.

STAINLESS STEEL

The stainless steel must be cleaned regularly (e.g. weekly) to ensure long life expectancy. Dry with a clean soft cloth. A specialized stainless-steel cleaning fluid may be used.

NOTE: Ensure that wiping is done along with the grain of the stainless steel to prevent any unsightly crisscross scratching patterns from appearing.

CONTROL PANEL SURFACE

The inlay control panel can be cleaned using warm soapy water. Ensure the cloth is clean and well wrung before cleaning. Use a dry soft cloth to remove any excess moisture left after cleaning.

IMPORTANT

Using neutral detergents and avoid using harsh cleaning chemicals, strong household detergents or products containing abrasives, as this will affect the appliance appearance and potentially remove any printing of artwork on the control panel and will void manufactures warrantee.

GREASE MESH FILTERS

The mesh filters can be cleaned by hand. Soak them for about 3 minutes in water with a grease-loosening detergent then brush it gently with a soft brush. Please do not apply too much pressure, avoid damaging it. (Leave to dry naturally out of direct sun light)

Filters should be washed separately to crockery and kitchen ustensils. it is advisable not to use rinse aid.

Removing grease mesh filters

a. Push the grease mesh filter buckles forward and remove the front of the filters.

b. Then push the left or right lower side stops of the filter up until the hanging point at one side stop is not hanging the hood cavity.

c. Finally, take the whole mesh filters away.

Please do not use abrasive detergent for it will damage the hood.

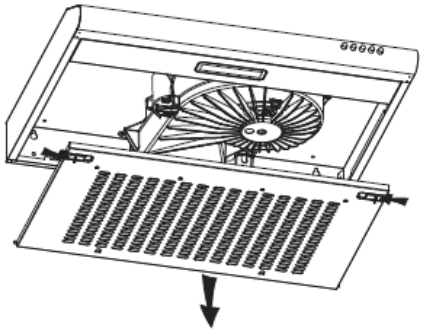

INSTALLING GREASE MESH FILTERS

- To install filters for the following four steps.
- Angle the filter into slots at the back of the hood.
- Push the button on handle of the filter.
- Release the handle once the filter fits into a resting position.
- Repeat to install all filters.

CARBON FILTER – buy separately

Activated carbon filter can be used to trap odors. Normally the activated carbon filter should be changed at three or six months according to your cooking habit. The installation procedure of activated carbon filter is as below.

1. Remove the grease filter.
2. Place the carbon filter onto the grease filter.
3. Fix the properly-adjusted carbon filter with the small steel wire.
4. Reinstall the grease filter.
5. Use carbon filters for recirculation mode only

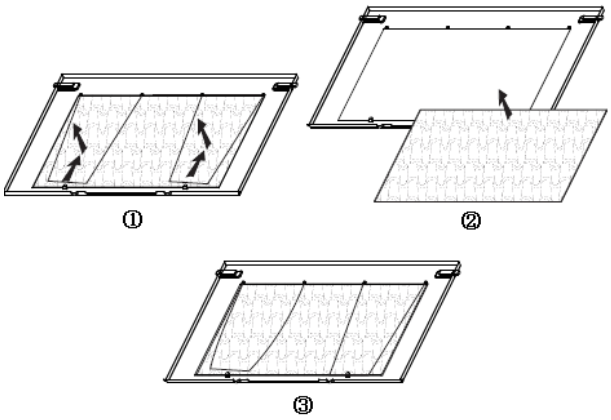

NOTE:

Make sure the filter is securely locked. Otherwise, it would loose and cause dangerous. When activated carbon filter attached, the suction power will be lowered.

BULB REPLACEMENT



The bulb must be replaced by the manufacturer, its service agent or similarly qualified persons.
Always switch off the electricity supply before carrying out any operations on the appliance. When handling bulb, make sure it is completely cooldown before any direct contact to hands.
When handling globes hold with a cloth or gloves toensure perspiration does not come in contact with theglobe as this can reduce the life of the globe.

Note:
Before changing the lights, make sure that the appliance is plugged off.
Protect against danger when changing lights, such as wearing gloves.

Changing the lights:
• Remove the filter.
• Loosen the 2pcs ST4*8mm self-tapping screw from the lighting panel, take out the lighting fixture.
• Disassembly the 3pcs ST3*12mm screws on the terminal box cover and take down the wire cover.
• Pull out the terminal from the PCB terminal block, disconnect the wire connector and replace the lamp.
• ILCOS D code for this lamp is: DBS-2/65-H-120/33
– LED modules –rectangle LED lamp
– Max wattage: 1×2 W
– Voltage range: AC 110-240V
– Dimensions:

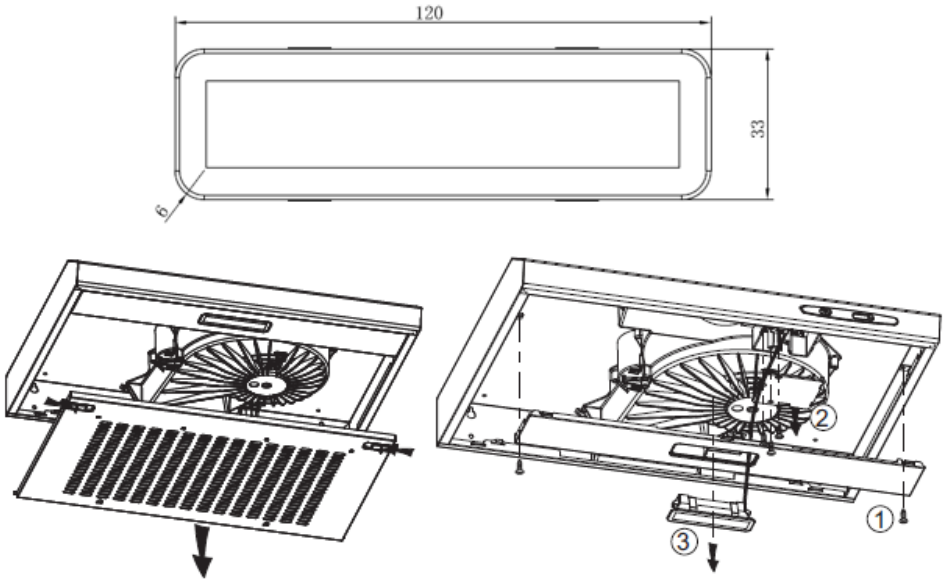

VIII. TECHNICAL FICHE

Suction power:	209.7 m³/h
Motor	1x85W
Color:	White

Environment friendly disposal

You can help protect the environment!

Please remember to respect the local regulations: hand in the non-working electrical equipment's to an appropriate waste disposal center.

HEINNER is a registered trademark of **Network One Distribution SRL**. Other brands and product names are trademarks or registered trademarks of their respective holders.

No part of the specifications may be reproduced in any form or by any means or used to make any derivative such as translation, transformation, or adaptation without permission from NETWORK ONE DISTRIBUTION.

Copyright © 2013 Network One Distribution. All rights reserved.

www.heinner.com, http://www.nod.ro

http://www.heinner.com, http://www.nod.ro

This product is in conformity with norms and standards of European Community

Importer: **Network One Distribution**

Str. Marcel Iancu, nr 3-5, Bucuresti, Romania

Tel: +40 21 211 18 56, www.heinner.com , www.nod.ro