CHEST FREEZER

Model:

HCF-246CNHE++/HCF-HM246CSE++

HCF-287CNHE++



- Total capacity: 246/287 L
- Energy class: E

HEINNER

1. INTRODUCTION

Please read the instructions carefully and keep the manual for future information.
This manual is designed to give all necessary instructions concerning installation, use and maintenance of the unit. In order to operate the unit correctly and safely, please read this instruction manual carefully before installation and use.

2. CONTENT OF YOUR PACKAGE

- ➔ **Chest freezer**
- ➔ **User manual**
- ➔ **Certificate of warranty**

3. SAFETY INFORMATION

In the interest of your safety and to ensure the correct use, before installing and first using the appliance, read this user manual carefully, including its hints and warnings. To avoid unnecessary mistakes and accidents, it is important to ensure that all people using the appliance are thoroughly familiar with its operation and safety features. Save these instructions and make sure that they remain with the appliance if it is moved or sold, so that everyone using it through its life will be properly informed on appliance use and safety. For the safety of life and property keep the precautions of these user's instructions as the manufacturer is not responsible for damages caused by omission.

Children and vulnerable people safety

This appliance is not intended for use by persons (including children) with reduced physical, sensory or mental capabilities, or lack of experience and knowledge, unless they have been given supervision or instruction concerning use of the appliance by a person responsible for their safety.
Keep all packaging away from children as there is risk of suffocation.
If you are discarding the appliance, pull the plug out of the socket, cut the connection cable (as close to the appliance as you can) and remove the door to prevent children playing from suffering an electric shock or from closing themselves inside it.
If this appliance, featuring a magnetic door seals, is to replace an older appliance having a spring lock (latch) on the door or lid, be sure to make the spring lock unusable before you discard the old appliance. This will prevent it from becoming a death trap for a child.
Children aged from 3 to 8 years are allowed to load and unload refrigerating appliances (this clause applies only to the EU region).
Children should be supervised to ensure that they do not play with the appliance.
Cleaning and user maintenance shall not be made by children unless they are aged from 8 years and above and supervised.
DANGER: Risk off child entrapment. Before you throw away your old appliance:

- Take off the doors.
- Leave the shelves in place so that children may not easily climb inside.
- Cut the connection cable (as close to the appliance as you can).

If this appliance featuring magnetic door seals is to replace an older appliance having a spring lock (latch) on the door or lid, be sure to make that spring lack unusable before you discard the old appliance. This will prevent it from becoming a death trap for a child. Warning! Keep ventilation opening, in the appliance enclosure or in the built-in structure, clear of obstruction.
Warning! Do not use mechanical devices or other means to accelerate the defrosting process, other than those recommended by the manufacturer.
Warning! Do not damage the refrigerant circuit.

Warning! Do not use other electrical appliances (such as ice cream makers) inside of refrigerating appliances, unless they are approved for this purpose by the manufacture.
Do not store explosive substances such as aerosol cans with a flammable propellant in this appliance.
During transportation and installation of the appliance, be certain that none of the components of the refrigerant circuit become damaged.
Avoid open flames and sources of ignition;
Thoroughly ventilate the room in which the appliance is situated.
It is dangerous to alter the specifications or modify this product in any way.
Any damage to the cord may cause a short circuit, fire and/or electric shock.
This appliance is intended to be used in household and similar applications such as:

- Staff kitchen areas in shops, offices and other working environments;
- Farm houses and by clients in hotels, motels and other residential type environments;
- Bed and breakfast type environments;
- Catering and similar non-retail applications.

Warning! Any electrical components (plug, power cord, compressor etc.) must be replaced by a certified service agent or qualified service personnel.
DO NOT USE AN EXTENSION CORD. Use an exclusive wall outlet. Do not connect your freezer to extension cords or in an outlet used by any other appliance.
Make sure that the power plug is not squashed or damaged by the back of the appliance. A squashed or damaged power plug may overheat and cause a fire.
Make sure that you can come to the mains plug of the appliance.
Do not pull the mains cable.
If the power plug socket is loose, do not insert the power plug. There is a risk of electric shock or fire.
You must not operate the appliance without the lamp.
This appliance is heavy. Care should be taken when moving it.
Do not remove nor touch items from the freezer if your hands are damp/wet, as this could cause skin abrasions or frost/freezer burns.
Avoid prolonged exposure of the appliance to direct sunlight.
Do not pull the main cable.
The fridge is only applied with power supply of single phase alternating current of 220~240V/50Hz. If fluctuation of voltage in the district of user is so large that the voltage exceeds the above scope, for safety sake, be sure to apply A.C. Automatic voltage regulator of more than 350W to the fridge. The fridge must employ a special power socket instead of common one with other electric appliances. Its plug must match the socket with ground wire.
Warning! The refrigerant and insulation blowing gas are flammable. When disposing of the appliance, do so only at an authorized waste disposal centre. Do not expose to flame.
Warning! When positioning the appliance, ensure the supply cord is not trapped or damaged.
Warning! Do not locate multiple portable socket-outlets or portable power supplies at the rear of the appliance.
Warning! The illuminating lamps must not be replaced by the user! If the illuminating lamps is damaged, contact the customer helpline for assistance. This warning is only for refrigerators that contain illuminating lamps.

Refrigerant

The refrigerant isobutene (R-600a) is contained within the refrigerant circuit of the appliance, a natural gas with a high level of environmental compatibility, which is nevertheless flammable. During transportation and installation of the appliance, ensure that none of the components of the refrigerant circuit becomes damaged. The refrigerant (R-600a) is flammable.
WARNING! Refrigerators contain refrigerant and gases in the insulation. Refrigerant and gases must be disposed of professionally as they may cause eye injuries or ignition. Ensure that tubing of the refrigerant circuit is not damage
prior to proper disposal.

Warning! Risk of fire
If the refrigerant circuit should be damaged:

- Avoid opening flames and sources of ignition.
- Thoroughly ventilate the room in which the appliance is situated.

Warning! During using, service and disposal the appliance, please pay attention to symbol similar as left side, which is located on rear of appliance (rear panel or compressor) and with yellow or orange color. It's risk of fire warning symbol. There are flammable materials in refrigerant pipes and compressor. Please be far away fire source during using, service and disposal.

4. DAILY USE

Do not put hot food in the appliance.
Frozen food must not be re-frozen once it has been thawed out.
Store pre-packed frozen food in accordance with the frozen food manufacture's instructions.
Appliance's manufactures storage recommendations should be strictly adhered to. Refer to relevant instructions.
Do not place carbonated of fizzy drinks in the freezer as it creates pressure on the container, which may cause it to explode, resulting in damage to the appliance.
Ice lollies can cause frost burns if consumed straight from the appliance.

5. CARE AND CLEANING

Before maintenance, disconnect the mains plug from the mains socket.
Do not clean the appliance with metal objects.
Do not use sharp objects to remove frost from the appliance. Use a plastic scraper.
Regularly examine the drain in the freezer for defrosted water. If necessary, clean the drain.

Cleaning the interior

Before using the appliance for the first time, wash the interior and all internal accessories with lukewarm water and some neutral soap so as to remove the typical smell of a brand new product, then dry thoroughly.
Important! Do not use detergents or abrasive powders, as these will damage the finish.

6. INSTALLATION

Important!
For electrical connection carefully follow the instructions given in specific paragraphs.
Unpack the appliance and check if there are damages on it. Do not connect the appliance if it is damaged. Report possible damages immediately to the place you bought it. In that case retain packing.
It is advisable to wait at least four hours before connecting the appliance to allow the oil to flow back in the compressor.
Adequate air circulation should be around the appliance, lacking this leads to overheating. To achieve sufficient ventilation, follow the instructions relevant to installation.
Wherever possible the spacers of the product should be against a wall to avoid touching or catching warm parts (compressor, condenser) to prevent possible burn.
The appliance must not be located close to radiators or cookers.
Make sure that the mains plug is accessible after the installation of the appliance.

7. SERVICE AND ENERGY SAVING

Any electrical work required to do the servicing of the appliance should be carried out by a qualified electrician or competent person.
This product must be serviced by an authorized Service Center, and only genuine spare parts must be used.

Don’ t put hot food in the appliance.
Don’ t pack food close together as this prevents air circulating.
Make sure food don’ t touch the back of the compartment(s).
If electricity goes off, don’ t open the door(s).
Don’ t open the door(s) frequently.
Don’ t keep the door(s) open for too long time.
Don’ t set the thermostat on exceeding cold temperatures.
All accessories, such as drawers, shelves, door balconies should be kept in original place for lower energy consumption.

8. ENVIRONMENT PROTECTION

Packaging materials

The materials with the symbol are recyclable. Dispose the packaging in a suitable collection containers to recycle it.

Disposal of the appliance

1. Disconnect the mains plug from the mains socket.
2. Cut off the mains cable and discard it.

9. ENVIRONMENT PROTECTION

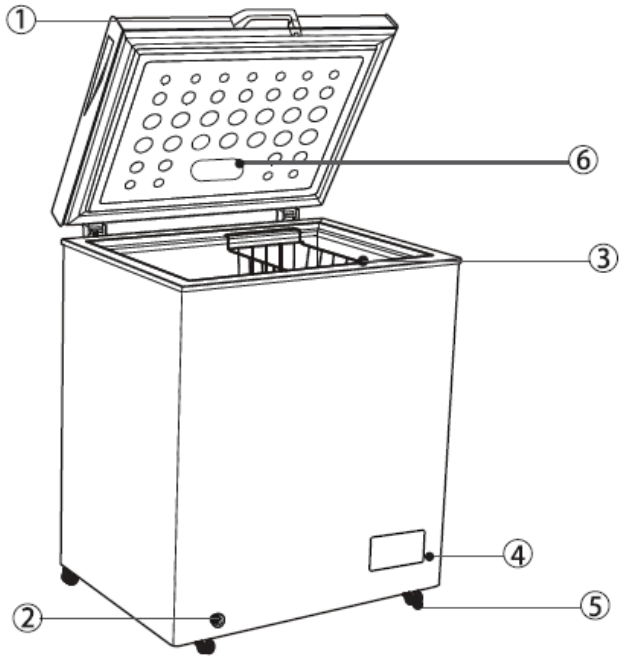

1. Handle	4. Thermostat control panel
2. Drain hole	5. Wheel
3. Basket	6. LED lamp

To get the best energy efficiency of this product, please place all shelves, drawers on their original position as the illustration.
This illustration is only for hinting, the detail please check your appliance.
Note: This refrigerating appliance is not intended to be used as a built-in appliance. Above picture is for reference only. Real appliance probably is different.

10. INSTALLATION

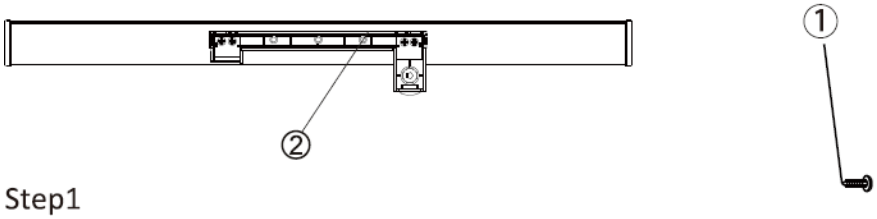

Step1

Step 1: Take out 4 srcews (1) and handle base (2) from accessory bag. Then fix the handle base (2) with door by 4 screws (1).

Step2 **Step3**

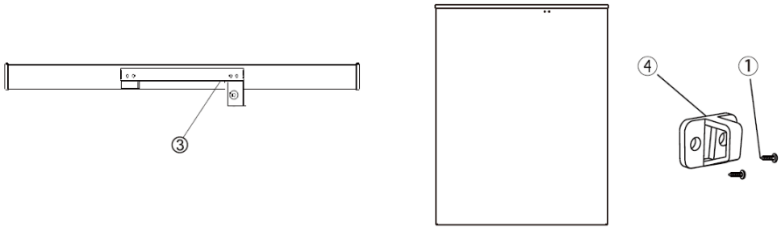

Step 2: insert handle cover (3) in the handle base (2) until a click.
Step 3: Screw lock catch (4) on the freezer cabinet by anther 2 screws (1).

Note

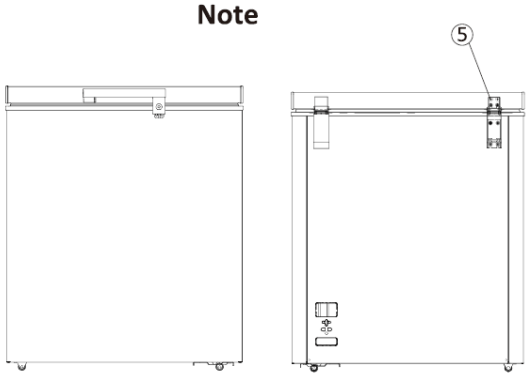

Note: if the lock ring failed to hold the lock when installing handle, please unscrew the round head screws (5) on the back of door and adjust the position of door upper and lower. Then drive the screw to fix the handle.

11. DAILY USE

Space requirement

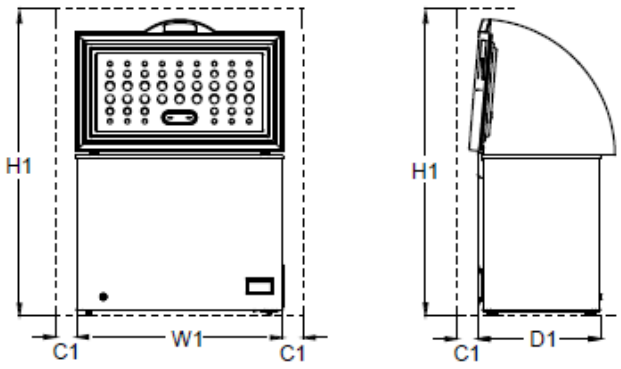

Model	W1 / mm (Product width)	D1 / mm (Product depth)	H1 / mm (Minimum heigth)	C1 / mm (Minimum clearance)
HCF-246CNHE++ HCF-HM246CSE++	954	616	1500	100
HCF-287CNHE++	1090	620	1600	100
Remark: D1 doesn't contain the external handle size.				

Positioning

Installing this appliance at a location where the ambient temeprature corresponds to the climate class indicated on the rating plate of the appliance:
- extended temperate: this refrigerating appliance is intended to be used at ambient temperatures ranging from 10 °C to 32 °C (SN);
- temperate: this refrigerating appliance is intended to be used at ambient temperatures ranging from 16 °C to 32 °C (N);
- subtropical: this refrigerating appliance is intended to be used at ambient temperatures ranging from 16 °C to 38 °C (ST);
- tropical: this refrigerating appliance is intended to be used at ambient temperatures ranging from 16 °C to 43 °C (T);

Location

The appliance should be installed well away from sources of heat such as radiators, boilers, direct sunlight etc. Ensure that air can circulate freely around the back of the cabinet. To ensure best performace, if the appliance is positioned below an overhanging wall unit, the minimum distance between the top of the cabinet and the wall unit must be at least 100 mm. ideally, however, the appliance should not be positioned below overhanging wall units. Accurate leveling is ensured by one or more adjustable feet at the base of the cabinet. This refrigerating appliance is not intend to be used as a built-in appliance.
Warning! It must be possible to disconnect the appliance from the mains power supply; the plug must therefore be easily accessible after installation.

Electrical connection

Before plugging in, ensure that the voltage and frequency shown on the rating plate correspond to your domestic power supply. The appliance must be earthed. The power supply cable is provided with a contact for this purpose. If th domestic power supply socket is not earthed, connect the appliance to a separate earth in compliance with current regulations, consulting a qualified electrician. The manufacturer declines all resposability if the above safety precautions are not observed.

Cleaning the interior

Before using the appliance for the first time, wash the interior and all internal accessories with lukewarm water and some neutral soap so as to remove the typical smell of a brand new product, then dry thoroughly. Important! Do not use detergents or abrasive powders, as these will damage the finish.

Temperature setting

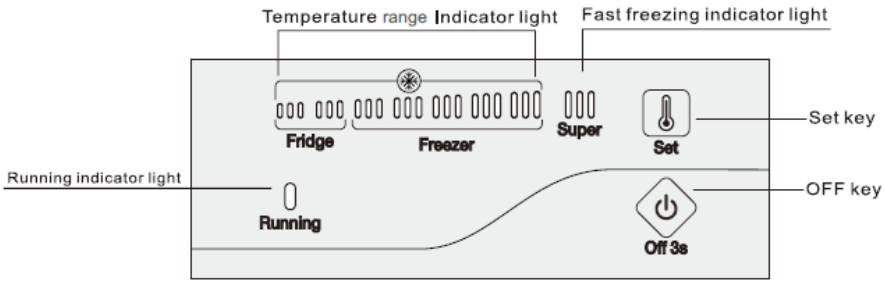

Press 'SET' key to adjust the temperature. Press once, temperature range LED indicator will be light on. It can be cycling setting, after 5 seconds, the electronic thermostat can confirm the settings automatically.
When all temperature range LED indicators are light on, press the 'SET' key, the SUPER LED indicator will be light on after 5 seconds, the fast freezing mode is activated. Press 'SET' key again, the SUPER LED indicator will light off, then turn to the Fridge mode.

The current is switched on

All LED lamps light on 1 second when the current is switched on, then running on the original setting mode before switched off.

The recommendations of the users setting

- Fridge mode recommendation



- Freezer mode recommendation



- Fast freezing mode



LED indicator status:

Temperature range LED indicator (Blue color):

- Fridge range (1,2 level)
- Freezer range (3,4,5,6,7 level)

Fast freezing LED indicator (Blue color): On Fast freezing mode, LED light on.
Turn off Fast freezing mode, LED light off.
Running LED indicator (Green color): Compressor running, LED light on.
Compressor stopped, LED light off.
After each operation is finished for 30 minutes, LED indicator will light slightly.
Power off memory function: when the power of chest freezer is switched on again, it will automatically run according to the mode setting before the power off .
OFF 3's: the power of chest freezer is switched off after press “OFF 3s” key for 3 seconds.

Freezing fresh food

The freezer compartment is suitable for freezing fresh food and storing frozen and deep-frozen food for a long time.
Place the fresh food to be frozen in the bottom compartment.
The maximum amount of food that can be frozen in 24 hours is specified on the rating plate.
The freezing process lasts 24 hours: during this period do not add other food to be frozen.

Storing frozen food

When first starting-up or after a period out of use. Before putting the product in the compartment let the appliance run at least 2 hours on the higher settings.
Important! In the event of accidental defrosting, for example the power has been off for longer than the value shown in the technical characteristics chart under „rising time”, the defrosted food must be consumed quickly or cooked immediately and then re-frozen (after cooked).

Thawing

Deep-frozen or frozen food, prior to be used, can be thawed in a fridge compartment or at room temperature, depending on the time available for this operation.
Small pieces may be even cooked still frozen, directly from the freezer. In this case, cooking will take longer.

Helpful hints and tips / Hints for freezing

To help you make the most of the freezing process, here are some important hints:
The maximum amount of food that can be frozen in 24 hours is specified on the rating plate.
The freezing process takes 24 hours. No further food to be frozen should be added during this period;
To start the SUPPER function 24 hours before placing food in appliance can help the best freezing capacity;
Only freeze top quality, fresh and thoroughly cleaned, foodstuffs;
Prepare food in small portions to enable it to be rapidly and completely frozen and to make it possible subsequently to thaw only the quantity required;
Wrap up the food in aluminium foil or polythene and make sure that the packages are airtight;
Do not allow fresh, unfrozen food to touch food which is already frozen, thus avoiding a rise in temperature of the latter;
Lean foods store better and longer than fatty ones; salt reduces the storage life of food;
Water ices, if consumed immediately after removal from the freezer , can possibly cause the skin to be freeze burnt;
It is advisable to show the freezing in date on each individual pack to enable you removal from the freezer, can possibly cause the skin to be freeze burnt;

Winter Security Function (Freezing protection)

The cold protection is the ability of the cold storage to operate at temperatures of -15 degrees Celsius, being a technical feature that derives from the construction of the appliance. This is not related to the climatic class of the product and can be activated from the control panel by setting the temperature to MAX. After this setting, the compressor starts operating at temperatures up to -15 degrees Celsius.

Hints for storage of frozen food

To obtain the best performance from this appliance, you should:
Make sure that the commercially frozen foodstuffs were adequately stored by the retailer;
Be sure that frozen foodstuffs are transferred from the food store to the freezer in the shortest possible time;
Not open the door frequently or leave it open longer than absolutely necessary.
Once defrosted, food deteriorates rapidly and cannot be refrozen.
Do not exceed the storage period indicated by the food manufacture.
To avoid contamination of food, please respect the following instructions:

- Opening the door for long periods can cause a significant increase of the temperature in the compartments of the appliance.
- Clean regularly surfaces that can come in contact with food and accessible drainage systems.
- Two-star frozen-food compartments are suitable for storing pre-frozen food, storing or making ice cream and making ice cubes.
- One-, two- and three-star compartments are not suitable for the freezing of fresh food.

Note: Please store different foods according to the compartments or target storage temperature of your purchased products.

- If the appliance is left empty for long periods, switch off, defrost, clean, dry, and leave the door open to prevent mould developing within the appliance.
- When refrigerating food, please be careful not to contact the surface of the inner box directly.
- When frozen food, in order to prevent moisture loss, prevent the odor, should separate the different food sealed storage, and can only waterproof sealing material.
- Hot food should be cooled to room temperature first, then put into the freezer, otherwise it will affect the storage status of other foods and increase the power consumption.

Order	Compartments TYPE	Target storage temp.[℃]	Appropriate food
1	Fridge	+2≤+6	Eggs, cooked food, packaged food, fruits and vegetables, dairy products, cakes, drinks and other foods are not suitable for freezing.
2	(***)*-Freezer	≤-18	Seafood (fish, shrimp, shellfish), freshwater aquatic products and meat products (recommended for 3 months, the longer the storage time, the worse the taste and nutrition), suitable for frozen fresh food.
3	***-Freezer	≤-18	Seafood (fish, shrimp, shellfish), freshwater aquatic products and meat products (recommended for 3 months, the longer the storage time, the worse the taste and nutrition), are not suitable for frozen fresh food.
4	**-Freezer	≤-12	Seafood (fish, shrimp, shellfish), freshwater aquatic products and meat products (recommended for 2 months, the longer the storage time, the worse the taste and nutrition), are not suitable for frozen fresh food.
5	*-Freezer	≤-6	Seafood (fish, shrimp, shellfish), freshwater aquatic products and meat products (recommended for 1 months, the longer the storage time, the worse the taste and nutrition), are not suitable for frozen fresh food.

12. CLEANING AND DEFROSTING THE FREEZER

For hygienic reasons the appliance interior, including interior accessories, should be cleaned regularly.
Caution! The appliance may not be connected to the mains during cleaning.
Danger of electrical shock! Before cleaning switch the appliance off and remove the plug from the mains, or switch off or turn out the circuit breaker or fuse. Never clean the appliance with a steam cleaner. Moisture could accumulate in electrical components. Hot vapors can lead to the damage of plastic parts. The appliance must be dry before it is placed back into service.
Important! Ethereal oils and organic solvents can attack plastic parts, e.g. lemon juice or the juice form orange peel, butyric acid, cleanser that contain acetic acid.
Do not allow such substances to come into contact the appliance parts.
Do not use any abrasive cleaners
Remove the food from the freezer. Store them in a cool place, well covered.
Switch the appliance off and remove the plug from the mains, or switch off or turn out the circuit breaker of fuse.
Clean the appliance and the interior accessories with a cloth and lukewarm water.
After cleaning wipe with fresh water and rub dry.
After everything is dry place appliance back into service.

Defrosting

The freezer, however, will become progressively covered with frost. This should be removed.
Never use sharp metal tools to scrape off frost from the evaporator as you could damage it.
However, when the ice becomes very thick on the inner liner, complete defrosting
should be carried out as fellows:
Unplug the unit. Remove the drain plug from the inside of the freezer. Defrosting
usually takes a few hours. To defrost faster keep the freezer door open.

For draining, place a tray beneath the outer drain plug.
Pull out the drain dial .

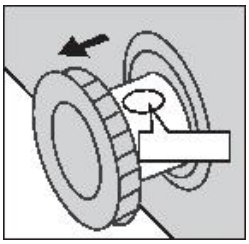

Rotate the drain dial 180 degree. This will let the water flow out in the tray.
When done, push the drain dial in. Re-plug the drain plug inside the freezer.
Note: Monitor the container under the drain to avoid overflow.
Wipe the interior of the freezer and replace the electrical plug in the electrical outlet.
Reset the temperature control to the desired setting.

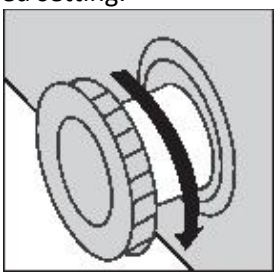

13. TROUBLESHOOTING

Caution! Before troubleshooting, disconnect the power supply. Only a qualified electrician of competent person must do the troubleshooting that is not in this manual.
Important! There are some sounds during normal use (compressor, refrigerant circulation).

Problem	Possible Cause	Solution
Appliance does not work	Mains plug is not plugged in or is loose	Insert mains plug
	Fuse has blown or is defective	Check fuse, replace if necessary
	Socket is defective	Mains malfunctions are to be corrected by an electrician.
The food is too warm	Temperature is not properly adjusted.	Please look in the initial Temperature Setting section
	Door was open for an extended period	Open the door only as long as necessary
	A large quantity of warm food was placed in the appliance within the last 24 hours	Turn the temperature regulation to a colder setting temporarily.
	The appliance is near a heat source	Please look in the installation location section

Appliance freezes too much	Temperature is set too cold	Turn the temperature regulation knob to a warmer setting temporarily
Unsual noises	The appliance is touching the wall or other objects.	Move the appliance slightly
	A component, e.g. a pipe, on the rear of the appliance is touching another part of the Appliance or the wall	If necessary, carefully bend the component out of the way.
Heavy build-up of frost on the door seal.	Door seal is not air-tight	Carefully warm the leaking sections of the door seal with a hair dyer (on a cool setting). At the same time shape the warmed door seal by hand such that it sits correctly.

If the malfunction shows again, contact the Service Center.
These data are necessary to help you quickly and correctly. Write the necessary data here, refer to the rating plate.

Replace the lamp

The switch of LED lamp is gravity controlled, when the angle dood-opening is bigger than 30 degree, light will switch on and switch off when the angle is smaller than 30 degree.
Notice: LED lamp does not work when the door is open. Please be released and check as below steps:

- Firstly, loosen screws on the lamp cover
- Secondly, loosen the screws fixed on the lamp electronics parts
- Thirdly, check the cable terminals of electronic parts and terminals of contacting lines for door lamp is loosening or not. Please fix them if they are not fixed. Then, check the light is on or not. If the lamp is switch on please install the lamp cover; if not, please further check the electronic part is intact or not. If necessary, please replace the electronic part to check the lamp is on or not. If the lamp still does not work, please contact staff of after-sale service for assistance
- The steps of LED lamp installing: fix the cable terminals of electronic parts and contacting lines in the door liner; install LED lectronic parts in the door liner and fix on by screws; install lamp cover on the holder and fix to finish all process.

WARNING! The illuminating lamps must not be replaced by the user! If the illuminating lamps is damaged, contact the customer helpline for assistance. This warning is only for refrigerators that contain illuminating lamps.

CUSTOMER CARE AND SERVICE
Always use original spare parts.
When contacting our Authorised Service Centre, ensure that you have the following data available: Model and Serial Number.
The information can be found on the rating plate. Subject to change without notice.

TECHNICAL DATA
The technical information is situated in the rating plate on the internal side of the appliance and on the energy label.

The QR code on the energy label supplied with the appliance provides a web link to the information related to the performance of the appliance in the EU EPREL database.
Keep the energy label for reference together with the user manual and all other documents provided with this appliance.
It is also possible to find the same information in EPREL using the link https:// eprel.ec.europa.eu and the model name and product number that you find on the rating plate of the appliance.
To access information about your product in the EPREL portal, you can scan the codes below:

HCF-246CNHE++

HCF-HM246CSE++

HCF-287CNHE++

Thank you for purchasing this product. If you need support with your product, visit our website using the links below.
Get User manuals: https://www.heinner.ro
Get Service information: https://www.heinner.ro

Environment friendly disposal
You can help protect the environment!
Please remember to respect the local regulations: hand in the non-working electrical equipment's to an appropriate waste disposal center.

HEINNER is a registered trademark of **Network One Distribution SRL**. Other brands and product names are trademarks or registered trademarks of their respective holders.
No part of the specifications may be reproduced in any form or by any means or used to make any derivative such as translation, transformation, or adaptation without permission from NETWORK ONE DISTRIBUTION.
Copyright © 2013 Network One Distibution. All rights reserved.
www.heinner.com, http://www.nod.ro

This product is in conformity with norms and standards of European Community

Importer: **Network One Distribution**
Marcel Iancu Street, 3-5, Bucharest, Romania
Tel: +40 21 211 18 56, www.heinner.com , www.nod.ro