HEINNER

TRADITIONAL COOKER HOOD

Model:

HCH-490-WH/HCH-490-BK/

HCH-490-BRW/HCH-490-SS



www.heinner.ro

- Traditional cooker hood
- Suction power: 304.5 m³/h
- Color: white/black/brown/stainless steel

Thank you for purchasing this product!

I. INTRODUCTION

Before using the appliance, please read carefully this instruction manual and keep it for future reference.

This instruction manual is designed to provide you with all required instructions related to the installation, use and maintenance of the appliance.

In order to operate the unit correctly and safety, please read this instruction manual carefully before installation and usage.

II. CONTENT OF YOUR PACKAGE

- **Traditional cooker hood**
- **User manual**
- **Warranty card**

III. SAFETY PRECAUTIONS

This manual explains the proper installation and use of your cooker hood, please read it carefully before using even if you are familiar with the product. The manual should be kept in a safe place for future reference.

Never to do:

- Do not try to use the cooker hood without the grease filters or if the filters are excessively greasy!
- Do not install above a cooker with a high level grill.
- Do not leave frying pans unattended during use because overheated fats or oils might catch fire.
- Never leave naked flames under the cooker hood.



- If the cooker hood is damaged, do not attempt to use.
- Do not flambé under the cooker hood.
- Caution: Accessible parts may become hot when used with cooking appliances.
- The minimum distance between the supporting surface for the cooking vessels on the hob and the lowest part of the cooker hood. (When the cooker hood is located above a gas appliance, this distance shall be at least 65 cm).
- The air must not be discharged into a flue that is used for exhausting fumes from appliances burning gas or other fuels. Range hoods and other cooking fume extractors may adversely affect the safe operation of appliances burning gas or other fuels (including those in other rooms) due to back flow of combustion gases. These gases can potentially result in carbon monoxide poisoning. After installation of a range hood or other cooking fume extractor, the operation of open flued gas appliances should be tested by a competent person to ensure that back flow of combustion gases does not occur.



Always to do:

- Important! Always switch off the electricity supply at the mains during installation and maintenance such as light bulb replacement.
- The cooker hood must be installed in accordance with the installation instructions and all measurements followed.
- All installation work must be carried out by a competent person or qualified electrician.
- Please dispose of the packing material carefully. Children are vulnerable to it.
- Pay attention to the sharp edges inside the cooker hood especially during installation and cleaning.
- Make sure the ducting has no bends sharper than 90 degrees as this will reduce the efficiency of the cooker hood.
- Warning: Failure to install the screws or fixing device in accordance with these instructions may result in electrical hazards.

- Warning: Before obtaining access to terminals, all supply circuits must be disconnected.
- Always put lids on pots and pans when cooking on a gas cooker.
- When in extraction mode, air in the room is being removed by the cooker hood. Please make sure that proper ventilation measures are being observed. The cooker hood removes odours from room but not steam.
- There shall be adequate ventilation of the room when the cooker hood is used at the same time as appliances burning gas or other fuels.
- Cooker hood is for domestic use only.
- If the supply cord is damaged, it must be replaced by the manufacturer, its service agent or similarly qualified persons in order to avoid a hazard.
- This appliance can be used by children aged from 8 years and above and persons with reduced physical, sensory or mental capabilities or lack of experience and knowledge if they have been given supervision or instruction concerning use of the appliance in a safe way and understand the hazards involved. Children shall not play with the appliance. Cleaning and user maintenance shall not be made by children without supervision.
- Caution: The appliance and its accessible parts can become hot during operation. Be careful to avoid touching the heating elements. Children younger than 8 years old should stay away unless they are under permanent supervision.
- There is a fire risk if cleaning is not carried out in accordance with the instructions.
- Regulations concerning the discharge of air have to be fulfilled.
- Clean your appliance periodically by following the method given in the chapter Maintenance.
- For safety reason, please use only the same size of fixing or mounting screw which are recommended in this instruction manual.
- Regarding the details about the method and frequency of cleaning, please refer to maintenance and cleaning section in the instruction manual.
- Cleaning and user maintenance shall not be made by children without supervision.
- When the cooker hood and appliances supplied with energy other than electricity are simultaneously in operation, the negative pressure in the room must not exceed 4 Pa (4 x 10-5 bar).
- Warning: Danger of fire. Do not store items on the cooking surfaces.
- A steam cleaner is not to be used.
- Never try to extinguish a fire with water, but switch off the appliance and then cover flame e.g. with a lid or a fire blanket.

IV. INSTALATION

Mounting of the V-Flap

If the cooker hood does not have an assembled V-flap 1, you should mount the half-parts to its body. The images only show an example of how to mount the V-flap, because the outlet may vary according to different models and configurations.

To mount the V-flap 1 you should:

- Mount two half-parts 2 into the body 6.
- The pin 3 should be top oriented.
- The axis 4 should be inserted into the holes 5 on the body.
- Repeat all the operations for the 2nd half-part.

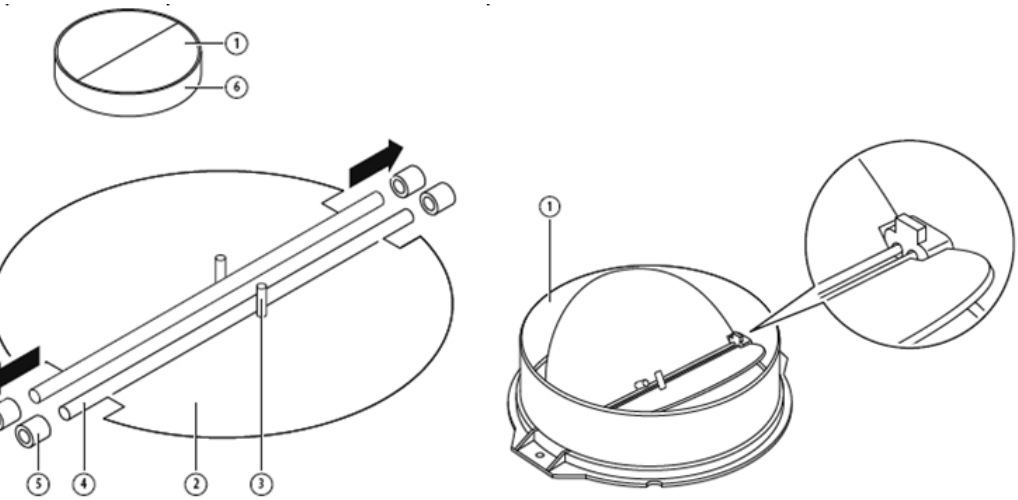

A. Wall mounting

If you have an outlet to the outside, your cooker hood can be connected as below picture by means of an extraction duct (enamel, aluminum, flexible pipe or non-flammable material with an interior diameter of 120 mm).

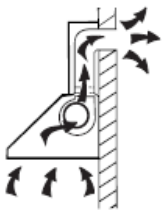

1. Before installation, turn the unit off and unplug it from the outlet.
2. The cooker hoods should be placed at a distance of 65-75cm from the cooking surface for best effect.

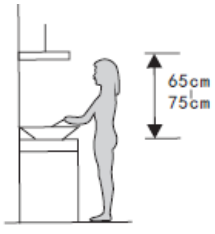

Pic 1

3. To install onto the wall, drill 4 holes of Ø 8 mm on a suitable place according with the centre distance of hole in the back of the cooker hood.

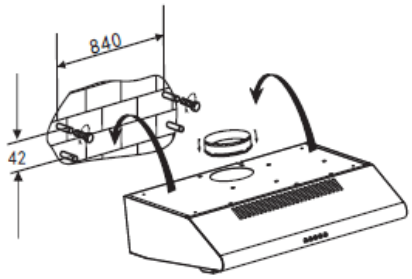

Pic 2

4. Insert the plug into the holes.
5. Insert and tight the screws into the plugs.
6. Put up the cooker hood onto the fixed screws.
7. Then use the attached accessories enclosed to turn the screws into the two holes of inside the hood, and then fix the screws to tighten the hood onto the wall.
8. Attach the outlet onto the cooker hood. Lay the expansion pipe on the outlet. Lift up the expansion pipe till it out of the wall through the hole on the wall. Note: The expansion pipe is not supplied.

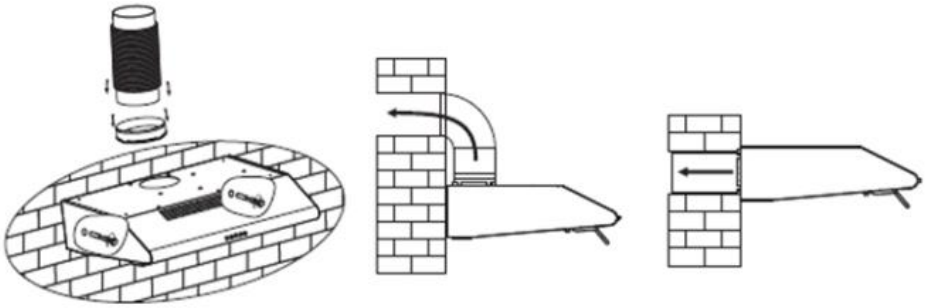

B. Cabinet mounting
1. Drill 4 holes of Ø 6 mm at the bottom of the hanging cupboard.
2. Put the outlet on the cooker hood, then install the cooker hood on the bottom of the cupboard, tighten the cooker hood with enclosed 4 screws.
3. Install the adjusted board on the bottom of the hood in order to keep out the gap between hood back and cupboard.
4. Lay the expansion pipe on the outlet. Lift up the expansion pipe till it out of the wall through the hole on the wall. Note: The expansion pipe is not supplied.

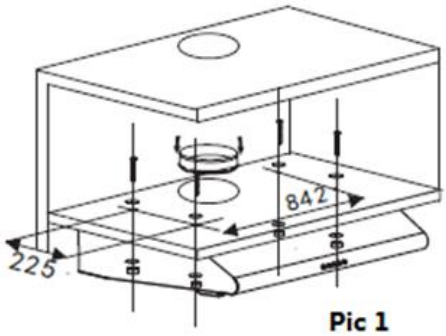

Pic 1

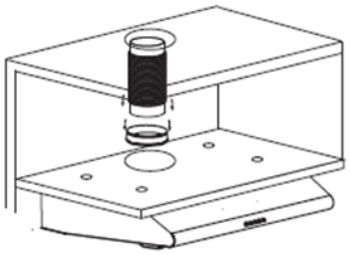

Pic 2

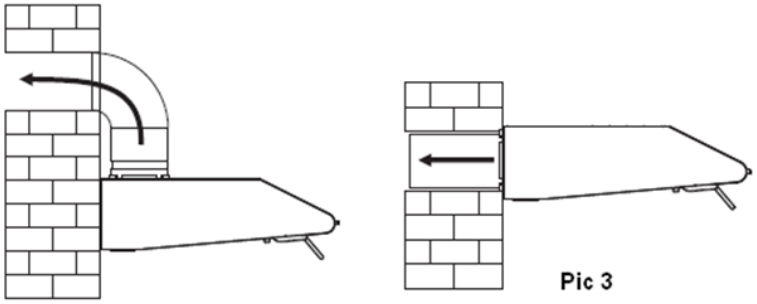

Pic 3

Notice: There are 2 methods for ventilation, including “horizontal ventilation” and “vertical ventilation”. Please pay attention to the ventilation method when installation.
Horizontal ventilation: See Pic 4A, please use the cover to seal the outlet on the top, then the air can be vented from the back.
Vertical ventilation: See Pic 4B, please use the cover to seal the outlet on the back, then the air can be vented from the top.

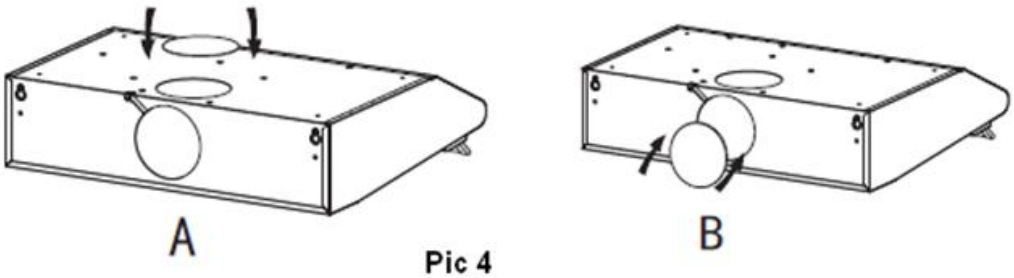

Pic 4

Air ventilation setting

Outdoor air ventilation: Turn the adjuster to outdoor position(pic.5A), install the outlet, turn on the cooker hood, then the air will be vented from the outside outlet.

Indoor air ventilation: Turn the adjuster to indoor position (pic.5B), install the outlet cover, turn on the cooker hood, then the air can be vented from the inside outlet.

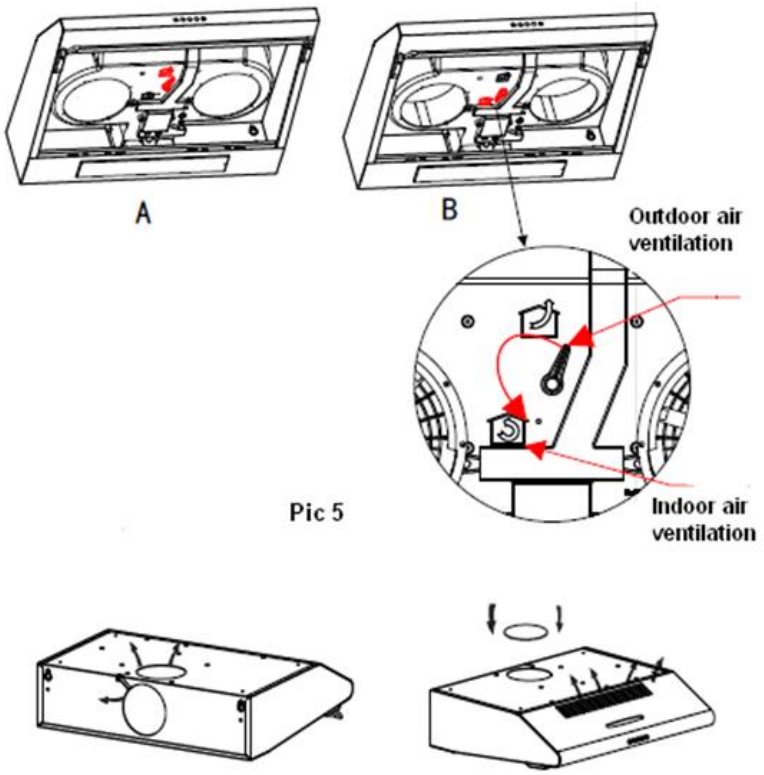

Pic 5

Warning:

- For safety reason, please use only the same size of fixing or mounting screws which are recommended in this instruction manual.
- Failure to install the screws or fixing device in accordance with these instructions may result in electrical hazards.

V. OPERATION

Push button

1. Push the stop button, and the motor will stop.
2. Push the low button, and the motor will run at low speed.
3. Push the middle button, and the motor will run at mid speed.
4. Push the high button, and the motor will run at high speed.
5. Push the lamp button and the two lights will illuminate. Push it again and the light will turn off.

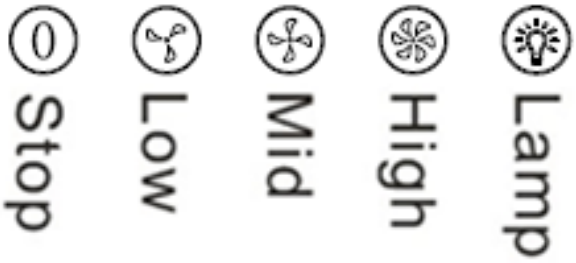

VI. TROUBLESHOOTING

Fault	Possible Cause	Solution
Light on, but motor does not work	Fan switch turned off	Select a fan switch position.
	Fan switch failed	Contact service center.
	Motor failed	Contact service center.
Light does not work, motor does not work	House fuses blown	Reset/Replace fuses.
	Mains power cable is loose or disconnected	Refit mains power cable to power outlet. Switch power outlet on.
Oil leakage	One way valve and the outlet are not tightly sealed	Take down the one way valve and seal with sealant.
	Leakage from the connection of chimney and cover	Take chimney down and seal.
Lights not working	Broken or faulty bulbs	Replace blubs as per this instruction.
Insufficient suction	The distance between the cooker hood and the gas top is too far	Refit the cooker hood to the correct distance.
The Cooker hood inclines	The fixing screw is not tight enough	Tighten the hanging screw and make it horizontal.

Note: Any electrical repairs to this appliance must conform to your local, state and federal laws. Please contact the service centre if in any doubt before undertaking any of the above. Always disconnect the unit from the power source when opening the unit.

VII. CLEANING AND MAINTENANCE

Caution:

- Before maintenance or cleaning is carried out, the cooker hood should be disconnected from the mains power supply. Ensure that the cooker hood is switched off at the wall socket and the plug removed.
- External surfaces are susceptible to scratches and abrasions, so follow the cleaning instructions to ensure the best possible result is achieved without damage.

GENERAL

Cleaning and maintenance should be carried out with the appliance cold especially when cleaning. Avoid leaving alkaline or acid substances (lemon juice, vinegar etc.) on the surfaces.

STAINLESS STEEL

The stainless steel must be cleaned regularly (e.g. weekly) to ensure a long life expectancy. Dry with a clean soft cloth. A specialized stainless steel cleaning fluid may be used.

Note: Ensure that wiping is done along with the grain of the stainless steel to prevent any unsightly crisscross scratching patterns from appearing.

CONTROL PANEL SURFACE

The inlay control panel can be cleaned using warm soapy water. Ensure the cloth is clean and well wrung before cleaning. Use a dry soft cloth to remove any excess moisture left after cleaning.

Important: Using neutral detergents and avoid using harsh cleaning chemicals, strong household detergents or products containing abrasives, as this will affect the appearance of the appliance and potentially remove any printing of artwork on the control panel and will void manufactures warrantee.

GREASE MESH FILTERS

The mesh filters can be cleaned by hand. Soak them for about 3 minute in water with a mild detergent and then brush it gently with a soft brush. Do not apply too much pressure so as to avoid any damage to it. (Leave to dry naturally out of direct sun light)

Filters should be washed separately to crockery and kitchen utensils. It is advisable not to use rinse aid.

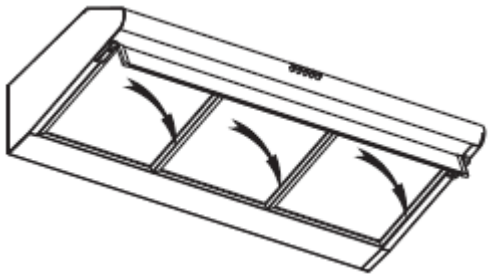

INSTALLING GREASE MESH FILTERS

To install filters for the following four steps:

- Angle the filter into the slots at the back of the hood.
- Push the button on the handle of the filter.
- Release the handle once the filter fits into a resting position.
- Repeat to install all filters.

CARBON FILTER (not included in the package)

Activated carbon filter can be used to trap odors. Normally the activated carbon filter should be changed every 3 to 6 months according to your cooking habits. The installation procedure of activated carbon filter is as below:

1. Before installing or replacing the carbon filters, disconnect the mains power to the unit.
2. Press the filter lock and remove the mesh filter.
3. Turn the carbon filter on both side of the motor anti-clockwise. Replace the carbon filters with the new carbon filters.
4. Place the mesh filter.
5. Connect the power supply to the wall socket.

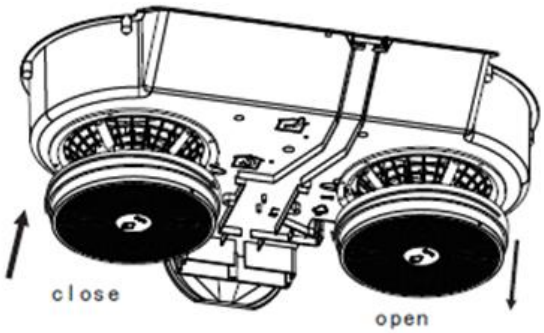

Note:

- Make sure the filter is securely locked. Otherwise, it would loosen and cause danger.
- When activated carbon filter attached, the suction power will be lowered.

BULB REPLACEMENT

- The bulb must be replaced by the authorized service or similarly qualified persons.
- Always switch off the electricity supply before carrying out any operations on the appliance. When handling bulb, make sure it has completely cooled down before any direct contact with hands.
- When handling bulbs hold with a cloth or gloves to ensure perspiration does not come in contact with the bulb as this can reduce the life of the bulb.

Note:

- Before changing the lights, make sure that the appliance is turned off and unplugged.
- Protect against danger when changing lights, such as wearing gloves.

Changing the lights:

- Remove the grease filter.
- Use a screwdriver to unscrew the screw of the wire cover and take away the wire cover. (Pic 1)
- Use a hand to press out the LED light. Then slightly pull the light connecting wire out and dismantle the terminal of the light connecting wire to replace the lights. (Pic 2)
  – LED modules – round lamp
  – Max wattage: 2x2 W
  – Voltage range: AC 110-240V
  – Dimensions:

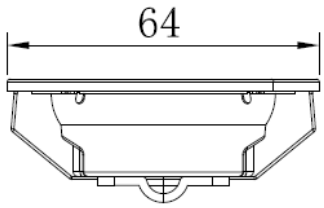

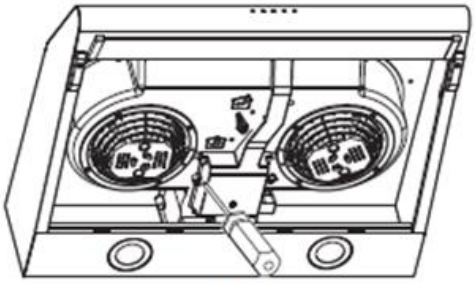

Pic 1

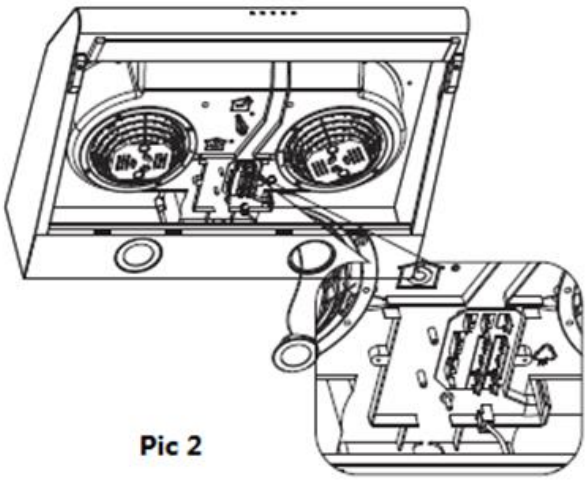

Pic 2

VIII. TECHNICAL FICHE

Suction power:	304.5 m³/h
Motor	2 x 60W
Color:	White/Black/Brown/Stainless steel



Environment friendly disposal

You can help protect the environment!

Please remember to respect the local regulations: hand in the non-working electrical equipment's to an appropriate waste disposal center.



HEINNER is a registered trademark of **Network One Distribution SRL**. Other brands and product names are trademarks or registered trademarks of their respective holders.

No part of the specifications may be reproduced in any form or by any means or used to make any derivative such as translation, transformation, or adaptation without permission from NETWORK ONE DISTRIBUTION.

Copyright © 2013 Network One Distribution. All rights reserved.

www.heinner.com, http://www.nod.ro

http://www.heinner.com, http://www.nod.ro



This product is in conformity with norms and standards of European Community

Importer: **Network One Distribution**

Str. Marcel Iancu, nr 3-5, Bucuresti, Romania

Tel: +40 21 211 18 56, www.heinner.com , www.nod.ro