HEAT PUMP DRYER

Model:

HHPD-M9K3A+++



- Heat pump dryer
- Loading capacity: 9 kg
- Energy class: C

HEINNER

1. INTRODUCTION

Please read the instructions carefully and keep the manual for future information.

This manual is designed to give all necessary instructions concerning installation, use and maintenance of the unit. In order to operate the unit correctly and safely, please read this instruction manual carefully before installation and use.

2. CONTENT OF YOUR PACKAGE

- ➔ **Heat pump dryer**
- ➔ **User manual**
- ➔ **Warranty certificate**

3. CONTENT OF YOUR PACKAGE

GENERAL

This heat pump dryer is intended for drying typical amounts of household laundry, which have been washed with water. It has been designed solely for private use and is not suitable for commercial or shared use (i.e. by several families in an apartment building).

- Use this appliance only as described in this user manual.
- This appliance is for indoor use only.
- Any other use is deemed improper and may result in damage to property or even personal injury.
- The manufacturer accepts no liability for damage caused by improper use.

The appliance corresponds to protection class I and may only be connected to a plug with a protective conductor that has been installed properly.
When connecting the appliance to the mains, make sure that the mains voltage is correct.
You can find more information about this on the rating plate.

Electric shock hazard

- Before connecting the tumble dryer, ensure that the connection parameter on the rating plate (fuse rating, voltage and frequency) match the mains electricity supply. If in any doubt, consult a qualified electrician.
- The electrical safety of this tumble dryer can only be guaranteed when correctly earthed. It is essential that this standard safety requirement is met. If in any doubt, please have the household wiring system tested by a qualified electrician. The manufacturer cannot be held liable for the consequences of an inadequate earthing system (e.g. electric shock).
- Do not pull the power cord forcefully. Please grasp the mains plug instead.
- Do not plug/draw the mains plug with wet hands.

• Do not bend, clamp, or damage the power cord and the power plug.
• If the power cable is damaged, it must be replaced by the manufacturer, its service agent, or similarly qualified persons in order to avoid a hazard.

Warning: The appliance must not be supplied through an external switching device, such as a timer, or connected to a circuit that is regularly switched on and off by a utility.
• Do not connect the appliance to the mains electricity supply by an extension lead, multi-socket adapter or similar.
• The accessibility of the plug must always be ensured, to disconnect the tumble dryer from the mains.
• If the appliance appears high temperature abnormally, please draw the mail plug immediately.

Injury danger

The appliance must not be installed behind a lockable door, a sliding door or a door with a hinge on the opposite side to that of the tumble dryer, in such a way that a full opening of the tumble dryer door is restricted.
• Do not disassemble or install the dryer without any instruction or supervision.
• Do not stack this dryer on washing machine without stacking kits. If you want to stack this dryer on a washing machine, please purchase the independent parts. Installation shall be done by the manufacturer, its service agent or similarly qualified persons to avoid any hazards.
• Do not lean on the opened door of the dryer.
• Condensed water is not drinking water. It can cause health problems in both people and animals if consumed.

Damage danger

Do not put more load than rated in this user manual.
• Do not operate the dryer without the door filter.
• Do not dry the clothes before being spun.
• Do not expose the dryer directly under the sun.
• Do not install the dryer in humid and drenching environment.
• While cleaning and maintenance, please do remember to pull out the power plug and do not directly spray the dryer with water.
• The appliance should not be overturned during normal use or maintenance.

Explosion & Fire danger

Please do not dry clothes with any flammable substances such as kerosene or alcohol. Otherwise, there may be an explosion.
• The appliance contains an environmentally friendly but flammable R290 refrigerant. Keep away from open flame and other sources of ignition.
• The tumble dryer is not to be used if industrial chemicals have been used for cleaning.
• Do not dry unwashed items in the tumble dryer.

• Items that have been soiled with substances such as cooking oil, acetone, alcohol, petrol, kerosene, spot removers, turpentine, waxes and wax removers should be washed in hot water with an extra amount of detergent before being dried in the tumble dryer.
• Items such as foam rubber (latex foam), shower caps, waterproof textiles, rubber backed articles and clothes or pillows fitted with foam rubber pads should not be dried in the tumble dryer.
• Fabric softeners, or similar products, should be used as specified by the fabric softener instructions.
• Oil-affected items can ignite spontaneously, especially when exposed to heat sources such as in a tumble dryer. The items become warm, causing an oxidation reaction in the oil. Oxidation creates heat. If the heat cannot escape, the items can become hot enough to catch fire. Piling, stacking or storing oil-affected items can prevent heat from escaping and so create a fire hazard.
• Remove all objects from pockets such as lighters and matches.
• If it is unavoidable that fabrics that contain vegetable or cooking oil or have been contaminated by hair care products be placed in a tumble dryer, they should first be washed in hot water with extra detergent. This will reduce, but not eliminate, the hazard.

WARNING:
• Never stop a tumble dryer before the end of the drying cycle unless all items are quickly removed and spread out so that the heat is dissipated.
• Openings must not be obstructed.
• The lint trap has to be cleaned frequently.
• Lint must not to be allowed to accumulate around the tumble dryer.
• WARNING: In the appliance enclosure or in the built-in structure, keep ventilation openings clear of obstruction.
• WARNING: Do not damage the refrigerant circuit.

Safety with children

• This appliance can be used by children aged from 8 years and above and persons with reduced physical, sensory, or mental capabilities or lack of experience and knowledge if they have been given supervision or instruction concerning use of the appliance in a safe way and understand the hazards involved. Children shall not play with the appliance. Cleaning and user maintenance shall not be done by children without supervision.
• Children should be supervised to ensure that they do not play with the appliance.
• Children of less than 3 years should be kept away unless continuously supervised.
• Always close the door after use.
In this way you will avoid the danger of:
1. Children climbing onto or into the dryer or hiding things in it.
2. Pets or other small animals climbing into it.

4. PRODUCT DESCRIPTION

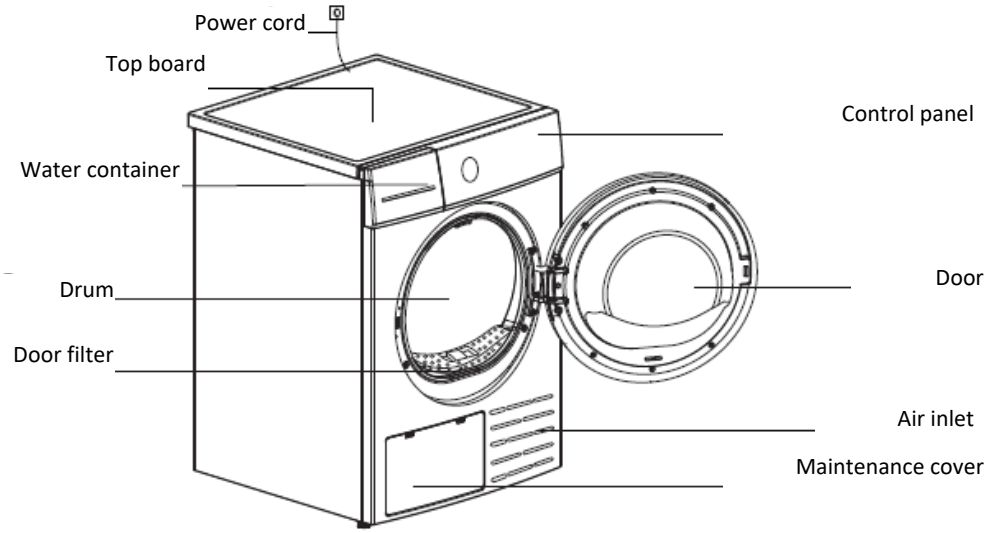

5. CONTROL PANEL

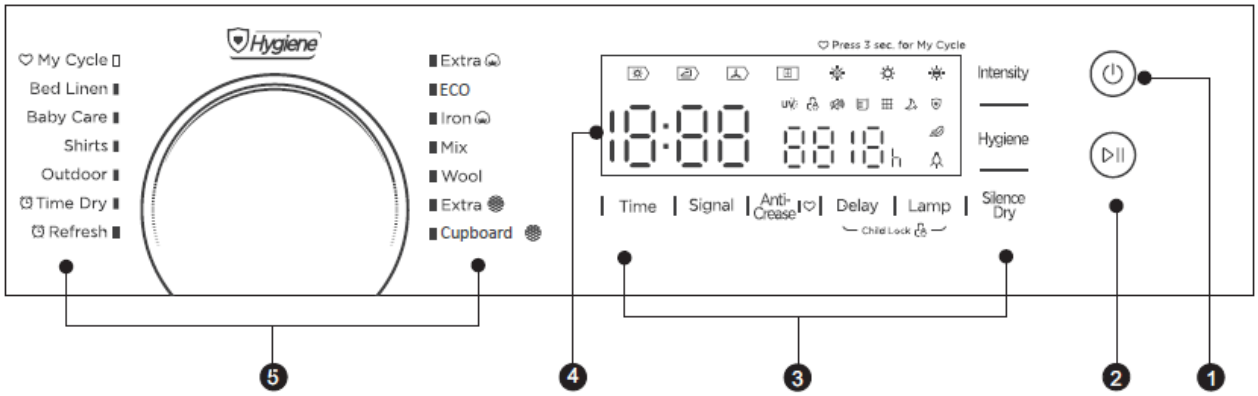

1. Power
   Product is on/off.

2. Start/Pause
   Press the button to start or pause the drying cycle.

3. Option
   These buttons are used for setting additional functions.

4. Display
   The display shows the setting, estimated program time remaining and status messages of your dryer.

5. Programs
   Different drying cycles can be selected according to the users need and the type of laundry to be dried.

6. INSTALLATION

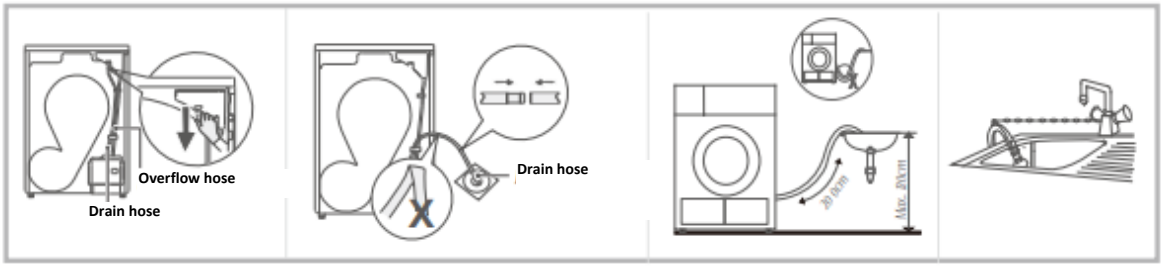

• Pull out the upper drain hose
• Put the external drain hose into the floor drain
• Put the hose holder in the washing basin or any other sink

Transport

• Move cautiously.
• Do not grasp any salient parts of machine.
• The machine door cannot be used as the handle for transport. If the dryer can't be transported erectly, the dryer can be tilted to right less than 30°. Risk of injury and damage! Improper handling of the appliance may result in injury.
• The appliance is very heavy. Never transport or carry the appliance alone; always with the assistance of another person.
• Remove all obstacles on the transport route and from the installation location, e.g. open doors and clear away objects lying on the floor.
• Do not use the open door as a handhold.
• Remove all package material before using the appliance.
• Before setting up the tumble dryer, check it for any externally visible damage. Do not install or use a damaged tumble dryer.
• Do not install the tumble dryer in a room where there is a risk of frost occurring. At temperatures around freezing point the tumble dryer may not be able to operate properly.
• There is a risk of damage if the condensed water is allowed to freeze in the pump and hoses.

Installation Position

• Children can become entangled in the packaging film or swallow small parts and suffocate. Do not allow children to play with the packaging.
• The appliance must not be installed behind a lockable door, a sliding door or a door with a hinge on the opposite side to that of the tumble dryer, in such a way that a full opening of the tumble dryer door is restricted.
• Do not restrict the floor clearance through deep pile carpets, strips of wood or similar. This might cause heat built-up which would interfere with the operation of the appliance.
1. It is recommended that, for your convenience, the machine is positioned close to your washing machine.
2.Do not stack this dryer on washing machine without stacking kits. (If you want to stack this dryer on a washing machine, please purchase the independent parts. Installation shall be done by the manufacturer, its service agent, or similarly qualified persons to avoid any hazards.)

3.The tumble dryer must be installed in a clean place, where dirt does not accumulate. Air must be able to circulate freely around the appliance. Do not obstruct the front air inlet or the air intake grilles at the back of the machine.
4.To keep vibration and noise within minimum level when the dryer is in use, it must be placed on a firm and level surface.
5.The feet must never be removed.

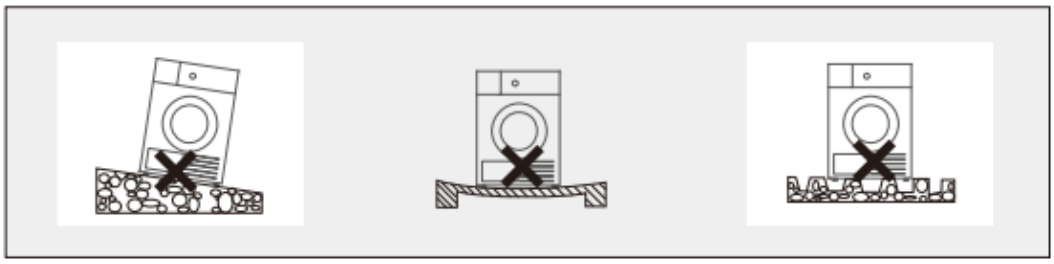

Level Adjusting

Once in its permanent operating position, check that the dryer is absolutely level with the aid of a spirit level. If it is not, adjust the feet by hand or using a tool.

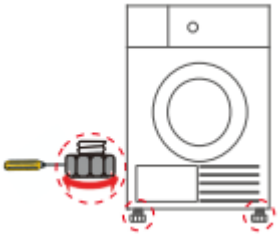

Power Supply Connection

1.Make sure that the voltage of the power supply is the same as the electric specification.
2.Do not connect the dryer with the power connection board, a universal plug or socket, do not use multi-plug adapters and extension cables.

• Leave it to stand for 2 hours after transporting. Before first use, please use the soft fabric to clean the inside drum.
1. Put some clean rags into the drum.
2.Plug the power, press [On/Off].
3. Select the [Refresh] Program, press [Start/Pause] button.
4.After finishing this program, please follow the “cleaning and care” to clean the door filter.
• During drying, the compressor and the water will generate some noise which is entirely normal

7. OPERATION

Before using, make sure the tumble dryer is installed correctly.

Before drying.

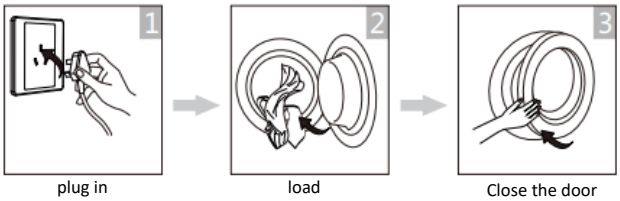

Drying

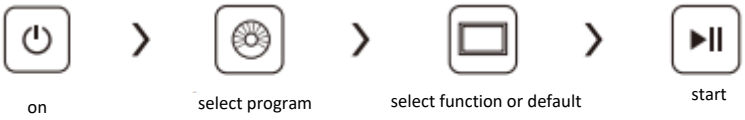

After Drying

Buzzer beep and "End" on display.



- Open the door and take out laundry.
- Pull out the container.
- Pour out condensate water.
- Clean the filter.
- Power off.

Before Each Drying

1.Before drying, thoroughly spin the laundry in washing machine. High spin speed shortens the drying time and saves energy.
2.For uniform drying result, sort the laundry according to fabric type and select the appropriate drying program.
3.Before drying, please close zips, hooks and eyelets, button, tie fabric belts, etc.
4.Remove all objects from pockets such as lighters and matches.
5.Sewin or remove underwiring from bras.
6.Close duvet covers and pillowcases to prevent small items from being rolled up inside them.
7.Leave jackets open and undo any long zips so that textiles dry evenly.
8.Do not over dry the clothes, because over dried clothes can easily get creases.
9.Do not dry the articles containing rubber or similar elastic materials.
10.Keep the area around the tumble dryer clean. Coal dust or flour may cause an explosion.
11.The door shall be opened only after the program of the tumble dryer is finished to avoid being scalded by hot steam or over heated drying machine.
12.Clean the lint filter and empty water container after each use to avoid extension of drying time and increase of energy consumption.
13.Do not dry clothes after dry-clean process

The reference weight of dry clothes (weight per item)

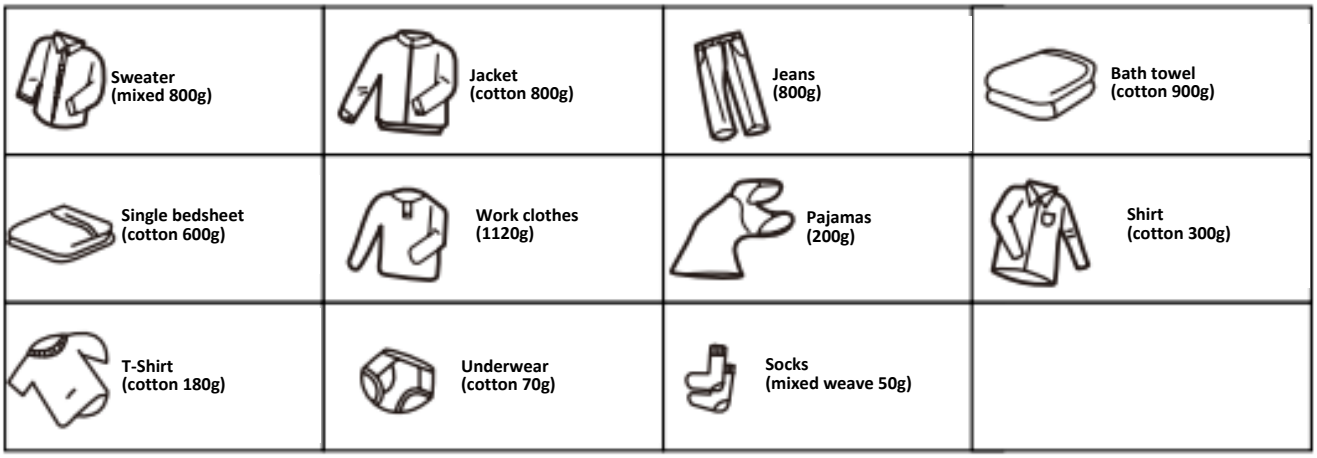

• Do not put more load than rated.
• Do not dry dripping wet laundry. The dryer might get damaged.
• Only dry laundry suitable for tumble drying.
Regard the laundry care labels:

 Suitable for tumble drying.

 Normal drying process: Drying in the tumbler is possible under normal load and temperature 80°C.

 Mild drying process: Caution is appropriate when tumble drying. Select mild process with reduced thermal action.

 Do not tumble dry: Articles unsuitable for drying in the tumbler

Functions



Delay

This function is used for delaying the start of the drying program up to 12 hours.
When the delayed program starts, the time starts to countdown on the display.
1.Load your laundry and make sure the machine door is closed.
2.Press the 【On/Off】 button, then use the program selector knob to select the desired program.
3.Press the【Delay】 button.
4.Repeatedly press the 【Delay】button to select the desired delay time.
5.After the 【Start/Pause】 button is pressed, the Dryer is at the running condition. The drying procedure will be automatically performed when the delay time is over.
6.If you press the【Start/Pause】button again, the delay function will be paused.
7.If you want to cancel the “Delay” function, please press the 【On/Off】button.



Time

When the[Time Dry] of [Refresh] program is selected, the [Time]button can be used to adjust the drying time in 10 min. steps.



Intensity

You can adjust the dryness level of the laundry by pressing the [Intensity] button.
1.The intensity function can be activated only before the program starts.
2.Press the [Intensity] button repeatedly to increase the drying grade.
3.Except the [Time Dry], [Wool], [Refresh] program, all the other programs can be adjusted with the [Intensity] function.



Anti-Crease

At the end of the drying cycle, the anti-crease time is 60 minutes (default) ,30minutes or 90minutes(selected).
This function prevents the laundry from creases. The laundry can be removed during the anti-crease phase. Except [Wool] and [Refresh], all the other programs have this function.



Lamp

The drum light will be on for 3 minutes when the button is pressed or 1 minute when the door is open.



Signal

Set the buzzer on or off. In default condition, the buzzer is on.
When the buzzer is on:
1.The dryer will affirm pressed function button by a sound.
2.If the program knob is rotated during the dryer is running, the buzzer will remind the user that this is an invalid operation.
3.When the drying program is done, the buzzer will beep



Hygiene

After selecting the program, you can choose the "Hygiene" function according to your needs.
Press [Hygiene] to select this function. Press it again to cancel. After selecting the “Hygiene" function, the clothes are sterilized during the drying process, making the clothes cleaner and safer. Use this function with caution for light, thin or delicate laundry.



Child Lock

1.This machine incorporates a special child safety lock, which can prevent children from carelessly pressing buttons or making the faulty operation.
2.When the drying cycle is running, press the [Delay] and [Lamp] buttons at the same time for 3 seconds to start child lock function.
3.When child lock function is set, the display will show Child lock icon and all buttons are deactivated, except [On/Off] button.
4.To deactivate the child lock function, the [Delay] and [Lamp] buttons shall be pressed at the same time for 3 seconds



Silence Dry

Rotate speed of the drum will drop down to reduce the noise of the dryer,but the drying time will extend.

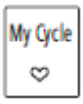

My Cycle

Used to define and save your favourite program, which is used frequently.

1.Select the desired program and other drying functions.

2.Press and hold the【Intensity】for 3 seconds until the beep sounds and the desired program has been saved.

3. Turn the program selector to the【My Cycle】 position, then you can start your favourite program. If you want to change the【My Cycle】 settings, repeat the steps (1) and (2).

Programs

Program		Max Load	Application/Properties	Delay	Time
Cotton	Extra	9 kg	For single or multi-layer cotton laundry to be dried completely for direct storage	Y	N
	Iron		For single layer cotton laundry to remain damp for ironing		
ECO			For single or multi-layer cotton laundry to be dried completely for direct wear		
Mix		3.5 kg	For mixed fabrics from cotton and synthetics	Y	N
Synthetics	Extra	3.5 kg	For thick or multi-layer synthetic fabrics to be dried completely.	Y	N
	Cupboard		To dry thin synthetic textiles, which are not ironed, such as easy care shirts, baby cloths or socks.		
Wool		1 kg	Gentle drying for machine washable wool items. The final moisture content will depend on the load size and the moisture content after spinning	Y	N
My Cycle		-	Define and save your favourite program	Y	-
Bed Linen		4.5 kg	To dry bed linen, bed sheets or other large items.	Y	N
Baby Care		1 kg	To dry small amount of baby clothing	Y	N
Shirts		1 kg	For easy care laundry, such as shirts and blouses equipped with anti-crease functionality to minimize the ironing effort. Place clothes loosely in the dryer. Once dried, remove quickly and hang it on a clothes hanger	Y	N
Outdoor		3 kg	To dry sportswear and thin fabrics from polyester, which are	Y	N
Time	Time Dry	3 kg	To dry individual items or complete the drying process of multi-layer fabrics with different drying behaviour, such as jackets, pillows or voluminous items. Min 10 min. to max. 150 min. (in 10 min. steps)	Y	Y
	Refresh	1 kg	To refresh clothes or to remove odours. Min. 20 min to max. 220 min. (in 10 min. steps)		

Note for Test Institutes:

1. ECO program in accordance with Regulation 2533/2023/EU for energy labelling, measured in accordance with EN 61121 and suitable for drying normal cotton load at rated load capacity.
2. ECO program is suitable for drying normal wet cotton laundry and it is the most efficient program in terms of energy consumption for cotton

Program		Max Load	Spin Speed/Residual Humidity	Drying time (min)
Cotton	Extra	9 kg	1000rpm / 60%	260
	Iron		1000rpm / 60%	200
ECO			1000rpm / 60%	140
Mix		3.5 kg	1000rpm / 60%	120
Synthetics	Extra	3.5 kg	800rpm / 40%	110
	Cupboard		800rpm / 40%	75
Wool		1 kg	/	180
My Cycle		-	/	210
Bed Linen		4.5 kg	1000rpm / 60%	170
Baby Care		1 kg	1000rpm / 60%	100
Shirts		1 kg	1000rpm / 60%	80
Outdoor		3 kg	1000rpm / 60%	140
Time	Time Dry	3 kg	/	10
	Refresh	1 kg	/	20

Consumption data

Model	Program	Capacity	Final moisture control	Drying time	Energy Consumption	Spin Speed
HHPD-M9K3A+++	ECO	9 kg	0%	03:20	1.59 kWh	1000 rpm
		4.5 kg	0%	02:05	0.88 kWh	1000 rpm
	Cotton Extra	9 kg	-3%	04:10	1.90 kWh	1000 rpm
		4.5 kg	-3%	02:40	1.20 kWh	1000 rpm
	Cotton iron	9 kg	12%	03:10	1.40 kWh	1000 rpm
		4.5 kg	12%	01:50	0.85 kWh	1000 rpm
	Synthetic Extra	3.5 kg	0%	01:50	0.85 kWh	800 rpm
	Synthetic Cupboard	3.5 kg	2%	01:40	0.70 kWh	800 rpm
	Wool	1 kg	6%	03:00	1.80 kWh	-

Thick or multi-layered fabrics, e.g. jackets etc., are not easy to dry. it is recommended to choose “Cotton Extra” program or use “Intensity” function.

• As uneven material, thick and multi-layered clothes are not easy to dry, it is better to choose the appropriate time drying program to completely dry them if some parts of the clothes are still damp after program finishes.

• Loading the household tumble dryer up to the maximum capacity for the respective programs will contribute to energy savings.

All data are measured in accordance with EN 61121.

The actual consumption may differ from the values given in the table, depending on the amount of the laundry, type of fabric, residual moisture and any additional functions selected.

Program selector

1.When the LED display screen brightens up, rotate the program knob to select the desired program.
2.Select the [Time], [Anti - Crease], [Delay], [Silence Dry], [Hygiene] or [Intensity] functions for additional options.
3.Press the [Start/Pause] button.
4.Press the [On/Off] button after the program has completed.

Program start
The drum will rotate after the program starts. The cycle phase LED in the display will light up and the remaining program time will be displayed.

Program end.
1.The drum will stop rotating after the program ends. The display will show"0:00" and related LED will illuminate. The dryer will start [Anti-Crease] function if user doesn't remove the load. After the load is removed, press [On/Off] to switch off if the display is on. Drying is complete, please unplug.
2.Deal with the problems according to “Trouble Shooting” section, if there is an unexpected stop during the drying procedure or the dryer shows an Error Code

8. MAINTENANCE

Cleaning and Care

Empty the water container.

1. Pull out and hold the water container with two hands.
2.Tilt the water container, pour out the condensate water into the basin.
3. Install the water container.

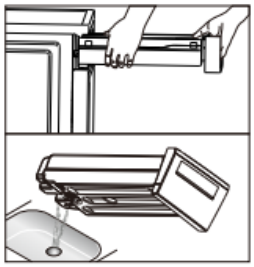

•Empty the water container after each use. Once the water container is filled completely, the program will be paused and the "Ful" will light on the display. After the container is emptied, the dryer can be restarted by pressing [Start/Pause] button.
• Do not drink the condensate water.
• Do not use the dryer without the water container.

Clean the filters
This dryer has a primary door lint filter. Make sure you clean the door filter after each cycle.
• To ensure the double-layer filter can be closed smoothly, the arrows at both ends need to be aligned, and the middle slot and the rib need to be aligned.

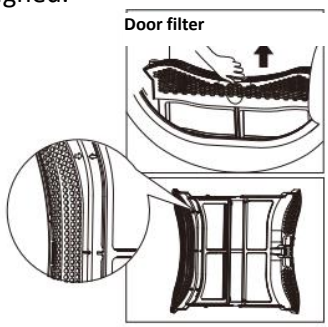

Clean the door filter.

1. Open the door.
2.Take out the door filter.
3. Open the filter and remove the fluff on the filter screen. You can use a vacuum cleaner to remove the lint or clean it by hand.
4. Throw lint in the garbage bin and do not wash it down the drain to avoid micro plastics in the used water system

Clean the heat exchanger

•Do not touch the heat exchanger with your hand, which may cause an injury
•As necessary, approx. once every 3 months, remove the fluff from the heat exchanger using a vacuum cleaner with a dusting brush attached.
• Clean the heat exchanger without applying any pressure. Otherwise, the heat exchanger could be damaged. The dryer will not dry if the cooling fins are damaged or bent.

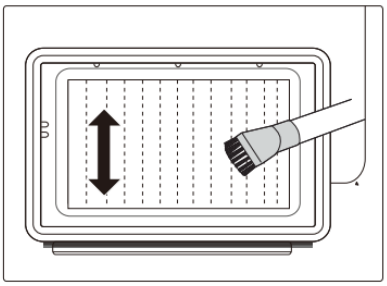

Foreign objects removal

•In case of foreign objects fall inside below the filter compartment, reove the filter, open the heat exchanger area compartment and remove the foreign object making sure not to touch the heat exchanger with bare hands to avoid injuries.

Clean Tumble dryer

• Disconnect the power cord before cleaning!
• Clean the dryer with a wet cloth which is only damped by clean water.
• Do not use solvents, abrasive cleaners, glass cleaners or all-purpose cleaners. These could damage plastic surfaces and other parts.
• Please wear gloves when cleaning.

After each use

• Prepare a wet cloth damped by clean water.
• Clean the door, especially the inside window.
• Clean the sealing around the door opening.
• Clean the humidity sensor inside the drum.
• Take out all the filters, clean the sealing and air flow openings.
• Before starting the dryer, dry all parts with a soft cloth.

9. TROUBLESHOOTING

Many malfunctions and faults that might occur in daily operation can be easily remedied. Time and money will be saved because a service call won't be needed. The following guide may help you to find the reason for a malfunction and correct it.

Display	Reason	Solutions
E33	Temperature sensor error	Pull out the plug from the socket Please contact your service centre if the local problem occurs.
E64	BLDC motor communication error	
E82	PCB communication error	
	Water pump failure or water level sensor failure	
	Container is full	Empty container

• Self-repair or non-professional repair may create safety risk and cease the guarantee.
• If the LED displays other prompt and the dryer does not work, pull out the plug from the socket, please call the service.

Problem	Solution
Display is not on	• Check if the mains plug is inserted. • Check if the power supply works • Check the selected program. • Press the [On/Off] button.
 is lighting	•Check the water container. If it's full, please pour out the condensate water and restart the dryer. •If the container is not full, please restart the dryer directly. • If the “full“ icon is still lighting after you have finished the first two steps, please call the service.
 is lighting	• Clean the lint filter
Dryer does not start	• Connect the tumble dryer to the mains • Turn on the tumble dryer. • Check the door is closed. • Check the program is set. • Press the [Start/Pause] button.
Degree of dryness was not reached or drying time too long	• Clean lint filter • Empty the water container. • Check the drain hose. • Check installation place is appropriate. • Keep the air inlet clean. • Use higher drying intensity level program or time program.
There are humming noises	• The compressor is operating. These noises are normal and do not indicate a fault.
The dryer switches off at the end of the program	• The dryer switches off automatically for energy saving. This is not an error but a normal function.

Technical specifications

Parameter / Model	HHPD-M9K3A+++
Dimensions (LxWxH)	675x595x845 (mm)
Ambient temperature	+2C ~ +35C
Rated input power	750W
Rated voltage	220-240V~
Rated frequency	50Hz
Refrigerant	R290
Weight of product	48kg
Rated capacity	9.0kg
GWP	3
Co2 - eq	0.00t
Quantity of refrigerant	130g

CUSTOMER CARE AND SERVICE

Always use original spare parts.

When contacting our Authorised Service Centre, ensure that you have the following data available: Model and Serial Number.

The information can be found on the rating plate. Subject to change without notice.

Thank you for purchasing this product. If you need support with your product, visit our website using the links below.

Get User manuals: https://www.heinner.ro

Get Service information: https://www.heinner.ro

Environment friendly disposal

You can help protect the environment!

Please remember to respect the local regulations: hand in the non-working electrical equipment's to an appropriate waste disposal center.

HEINNER is a registered trademark of **Network One Distribution SRL**. Other brands and product names are trademarks or registered trademarks of their respective holders.

No part of the specifications may be reproduced in any form or by any means or used to make any derivative such as translation, transformation, or adaptation without permission from NETWORK ONE DISTRIBUTION.

Copyright © 2013 Network One Distibution. All rights reserved.

www.heinner.com, http://www.nod.ro

This product is in conformity with norms and standards of European Community

Importer: **Network One Distribution**

Marcel Iancu Street, 3-5, Bucharest, Romania

Tel: +40 21 211 18 56, www.heinner.com , www.nod.ro