MINIBAR

Model:

HMB-M66E++



- Total capacity: 66 L
- Energy class: E

HEINNER

1. INTRODUCTION

Please read the instructions carefully and keep the manual for future information.
This manual is designed to give all necessary instructions concerning installation, use and maintenance of the unit. In order to operate the unit correctly and safely, please read this instruction manual carefully before installation and use.

2. CONTENT OF YOUR PACKAGE

- ➔ **Refrigerator**
- ➔ **User manual**
- ➔ **Certificate of warranty**

3. SAFETY WARNINGS

Before switching on the appliance for the first time, please read the following safety instructions!
This appliance is intended for use in domestic and similar applications such as staff kitchens in shops, offices and other working environments; farmhouses and by customers in hotels, motels and other residential type environments; bed and breakfast type environments; catering and similar non-retail applications.
This appliance is not intended for use by persons (including children) with reduced physical, sensory or mental capabilities, or lack of experience and knowledge, unless they have been given supervision or instruction concerning the use of the appliance by a person responsible for their safety.

Explanation of terms/symbols

	**DANGER** This symbol indicates that there are dangers to the life and health of persons due to extremely flammable gas.
	**WARNING** The signal word indicates a medium hazard which, if not avoided, may result in death or serious injury.
	**CAUTION** The signal word indicates a low level of risk which, if not avoided, may result in minor or moderate injury.
	**ATTENTION** The signal word indicates important information (e.g. damage to property), but not danger.

Important: Pay particular attention to messages that contain the words **DANGER, WARNING** or **CAUTION**. These words are used to alert you to a potential hazard that can seriously injure you and others.
The instructions will tell you how to reduce the chance of injury and let you know what can happen if the instructions are not followed.
Attention: These operating instructions are general. This means that certain functions apply to your refrigerator/freezer, while others do not.
We are constantly working on the further development and improvement of our appliance types and models. Therefore, we reserve the right to make changes to the design, equipment and accessories of all types and models without prior notice.

General safety



Risk of fire/flammable materials

The refrigerant and cyclopentane foam used in the appliance are flammable. Therefore, when the appliance is scrapped, it must be kept away from any fire source and recovered by a specialist recovery company with the appropriate qualifications, and not disposed of by incineration, in order to prevent damage to the environment or other harm.

WARNING

- Children should be supervised to ensure that they do not play with the appliance.
- If the supply cord is damaged, it must be replaced by the manufacturer, its service agent or similarly qualified persons in order to avoid a hazard.
- Do not store explosive substances such as aerosol cans with a flammable propellant in this appliance.
- The appliance must be unplugged after use and before conducting user maintenance on the appliance.
- Keep ventilation openings, in the appliance enclosure or in the built-in structure, clear of obstruction.
- Do not use mechanical devices or other means to accelerate the defrosting process, other than those recommended by the manufacturer.
- Do not damage the refrigerant circuit.
- Do not use electrical appliances inside the food storage compartments of the appliance, unless they are of the type recommended by the manufacturer.
- Please abandon the refrigerator according to local regulators for it use flammable blowing gas and refrigerant.
- When positioning the appliance, ensure the supply cord is not trapped or damaged.
- Do not locate multiple portable socket-outlets or portable power supplies at the rear of the appliance.
- Do not use extension cords or ungrounded (two prong) adapters.
- To avoid a hazard due to instability of the appliance, it must be fixed in accordance with the instructions.
- The refrigerator must be disconnected from the source of electrical supply before attempting the installation of accessory. Ensure that the power cable is not trapped by the refrigerator. Do not step on the power cable.
- For a freestanding appliance: this refrigerating appliance is not intended to be used as a built-in appliance.

Daily use

CAUTION

- Do not pull the power cord when pulling the power plug of the refrigerator. Please firmly grasp the plug and pull out it from the socket directly.
- To ensure safe use, do not damage the power cord or use the power cord when it is damaged or worn.
- Please use a dedicated power socket and the power socket shall not be shared with other electrical appliances.

- The power plug should be firmly contacted with the socket or else fires might be caused.
- Please ensure that the grounding electrode of the power socket is equipped with a reliable grounding line.
- The fridge is only applied with power supply of single-phase alternating current of 220~240V/50Hz.
- Please turn off the valve of the leaking gas and then open the doors and windows in case of leakage of gas and other flammable gases.
- Do not unplug the refrigerator and other electrical appliances considering that spark may cause a fire.
- Do not use electrical appliances on the top of the appliance, unless they are of the type recommended by the manufacturer.
- The gaps between refrigerator doors and between doors and refrigerator body are small, be noted not to put your hand in these areas to prevent from squeezing the finger. Please be gentle when close the refrigerator door to avoid falling articles.
- Do not pick foods or containers with wet hands in the freezing chamber when the refrigerator is running, especially metal containers to avoid frostbite.
- Do not allow any child to get into or climb the refrigerator; otherwise, suffocation or falling injury of the child may be caused.
- Do not place heavy objects on the top of the refrigerator considering that objectives may fall when close or open the door, and accidental injuries might be caused.
- Do not put flammable, explosive, volatile and highly corrosive items in the refrigerator to prevent damages to the product or fire accidents.
- Do not place flammable items near the refrigerator to avoid fires.
- The refrigerator is intended for household use, such as storage of foods; it shall not be used for other purposes, such as storage of blood, drugs or biological products, etc.
- Do not store beer, beverage or other fluid contained in bottles or enclosed containers in the freezing chamber of the refrigerator; or otherwise, the bottles or enclosed containers may crack due to freezing to cause damages.

WARNING

For EU standard: This appliance can be used by children aged from 8 years and above and persons with reduced physical, sensory or mental capabilities or lack of experience and knowledge if they have been given supervision or instruction concerning use of the appliance in a safe way and understand the hazards involved. Children shall not play with the appliance. Cleaning and user maintenance shall not be made by children without supervision.

To avoid contamination of food, please respect the following instructions:

- Opening the door for extended periods can cause a significant increase of the temperature in the compartments of the appliance.
- Clean regularly surfaces that can come in contact with food and accessible drainage systems.
- Store raw meat and fish in suitable containers in the refrigerator, so that it is not in contact with or drip onto other food.
- Two-star frozen-food compartments are suitable for storing pre-frozen food, storing or making ice-cream and making ice cubes (Note 1) (*).
- 1-star, 2-star and 3-star compartments are not suitable for the freezing of fresh food (Note 2) (*).
- For appliances without a 4-star compartment: this refrigerating appliance is not suitable for freezing foodstuffs (Note 3) (*).
- If the refrigerating appliance is left empty for extended periods, switch off, defrost, clean, dry, and leave the door open to prevent mould developing within the appliance.

Note 1, 2, 3: Please confirm whether it is applicable according to your product compartment type.
(*): This feature varies depending on the model purchased.

"4 star" symbol: Freezer at – 18 °C or colder, and it has the ability of quick freezing a certain amount of food.

"3 star" symbol: Freezer compartment at – 18 °C or colder.

"2 star" symbol: Freezer compartment at – 12 °C or colder.

"1 star" symbol: Freezer compartment with a target temperature and storage conditions of –6 °C.

CAUTION

This product is not recommended for use with sockets or main switch with the AFCI/ GFCI function, otherwise it may cause false tripping.

1. It may not pose a safety risk when tripped.
2. If tripping persists, it is recommended to replace the sockets or main switch with models not equipped with AFCI/GFCI.

WARNING

Risk of child entrapment. Before you throw away your old refrigerator or freezer:

- Take off the doors.
- Leave the shelves in place so that children may not easily climb inside.

Environmental protection

Disposing of old electrical devices in an environmentally friendly manner

This crossed-out wheeled bin symbol indicates that waste electrical and electronic products (WEEE) should be disposed of separately from the municipal waste stream.

Old electrical products can contain hazardous substances so correct disposal of your old appliance will help prevent potential negative consequences for the environment and human health. Your old appliance may contain reusable parts that could be used to repair other products, and other valuable materials that can be recycled to conserve limited resources.



Package information

Packaging materials of the product are manufactured from recyclable materials in accordance with our National Environment Regulations. Do not dispose of the packaging materials together with the domestic or other wastes. Take them to the packaging material collection points designated by the local authorities.



4. PRODUCT DESCRIPTION

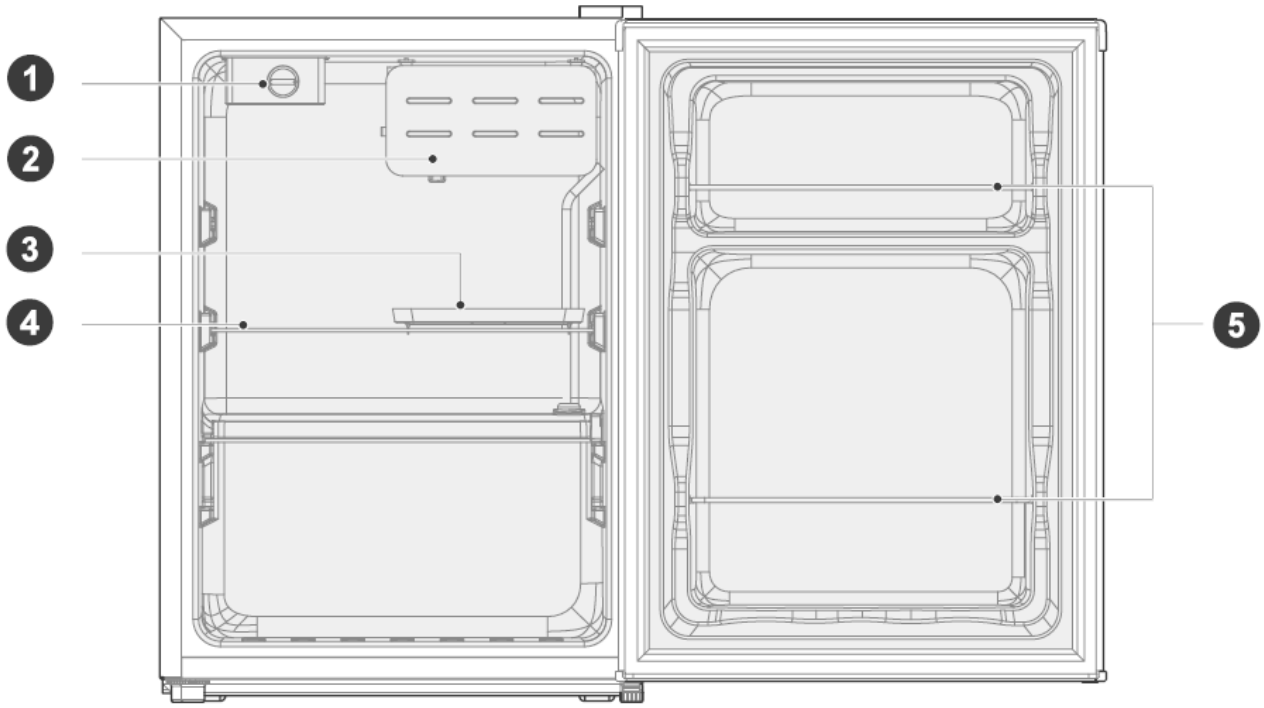

1. Thermostat knob	4. Shelf
2. Small door	5. Fence
3. Drain tray	

For the most efficient use of energy, please keep all internal items such as trays, drawers, shelves, and ice cube tray in the position specified by the manufacturer.
This refrigerator appliance must be installed independently and cannot be used as a built-in appliance. Otherwise, the performance and service life of the appliance will be reduced, and the manufacturer does not provide warranty.

ATTENTION

Differences: Due to technical changes, some of the illustrations in this manual may not accurately reflect the appearance of the actual product.

5. INSTALL INSTRUCTIONS

Before first use

Remove the exterior and interior packing, wipe the outside thoroughly with a soft dry cloth and the inside with a wet, lukewarm cloth.
Avoid placing the cabinet in a narrow recess or near any heat source, direct sunlight, or moisture.
Keep the air circulation free around the cabinet. When installing the unit, ensure 10 cm of free space at both sides, 10 cm at the top of the unit, and not more than 7.5 cm at the rear of the unit.
Before connecting your refrigerator to the power supply, check that the voltage stated on the rating label of your appliance corresponds to the voltage in your home. A different voltage could damage the appliance.
After connecting the appliance to the power supply, wait 2-3 hours before putting food in the appliance. If you put the food in before the appliance has cooled down, there is a risk that the food may spoil.
The appliance must be grounded. The manufacturer is not responsible for damages that may occur as a result of usage without grounding.

Space requirement

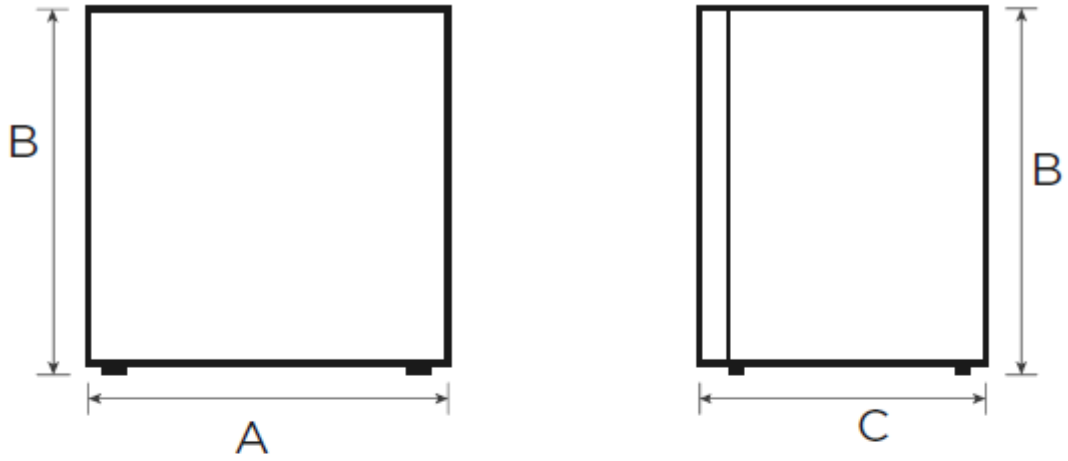

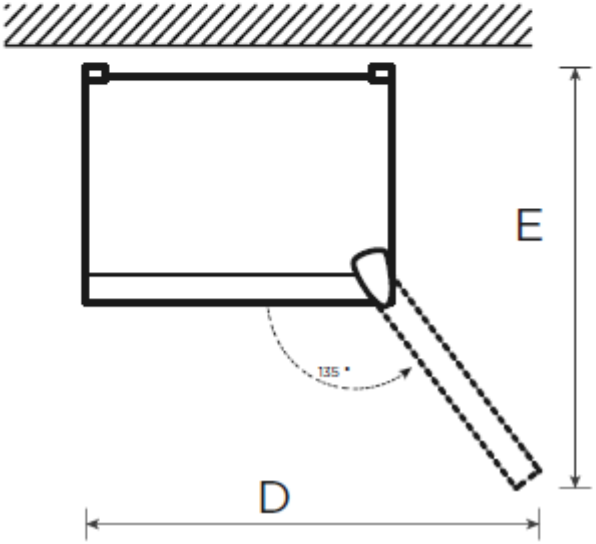

A	B	C	D	E
445 mm	630 mm	510 mm	719 mm	820 mm

Connecting the appliance

After installing the product, please let it stay for more than 2 hours before turning on the power, otherwise it will lead to a decrease in cooling capacity or a damage to the product.

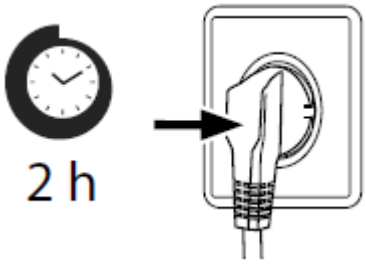

Allow the appliance to run empty for 24 hours so the compartment can cool to the appropriate temperature.

CAUTION

The refrigerator should always be plugged into its own individual electrical outlet which has a voltage rating that matches the rating plate.
When positioning the appliance, ensure the supply cord is not trapped or damaged.

Ambient temperature

Depending on the climate class, this refrigerator is intended to be used at an ambient temperature range as specified in the following table.
The product may not operate properly at temperatures outside of the specific range.
You can find the climate class on the product label.

Climate class	Ambient temperature
SN	+10 °C to +32 °C
N	+16 °C to +32 °C
ST	+16 °C to +38 °C
T	+16 °C to +43 °C

If you have any doubts regarding installation, please turn to the vendor, to our customer service or to the nearest Authorised Service Centre.

ATTENTION

The cooling performance and power consumption of the refrigerator may be affected by the ambient temperature, the door-opening frequency, and the location of the refrigerator. We recommend adjusting the temperature settings as appropriate.

Door reversal

List of tools to be provided by the user:	
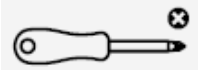	Cross screwdriver
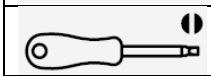	Thin blade screwdriver
	Masking tape

1. Secure the door with adhesive tape.

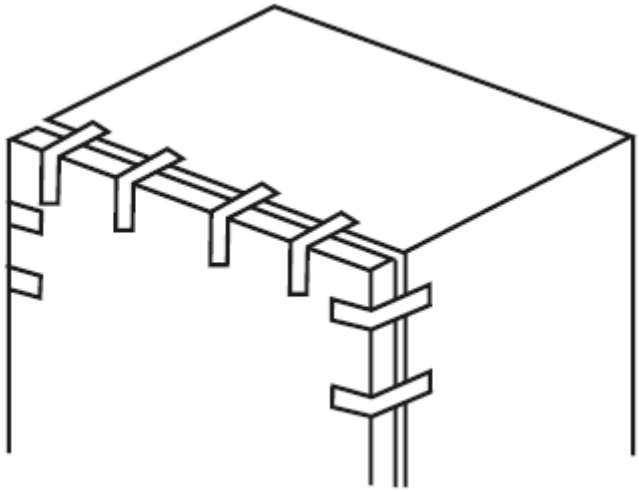

2. Remove the hole caps, the upper hinge cover, and the upper hinge mounting screws, then remove the upper hinge. Hold the door upright throughout the process to prevent it from falling.

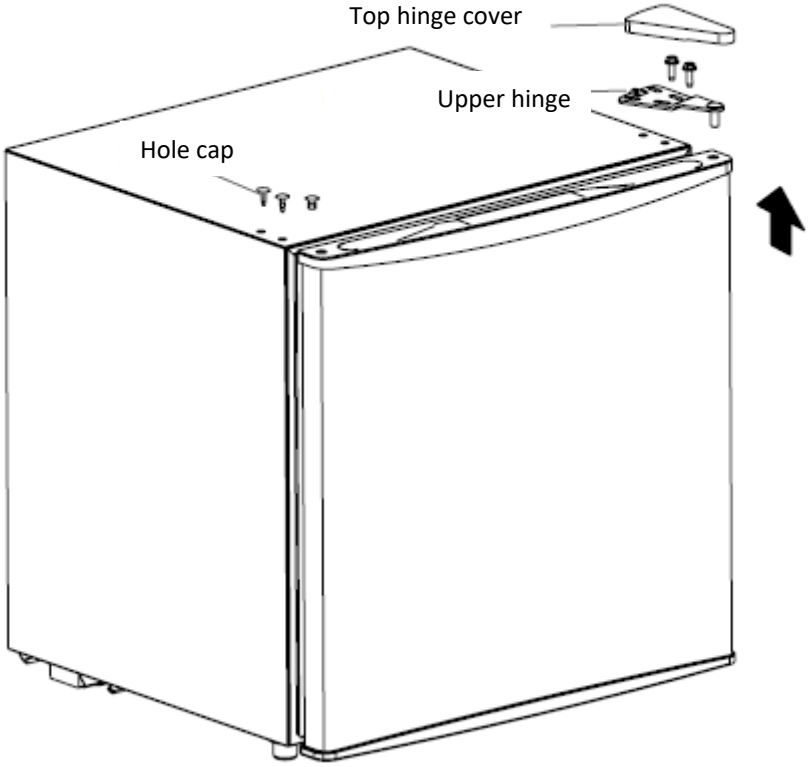

3. Remove the door. Remove the stopper from the bottom of the door, then install the stopper on the opposite side.

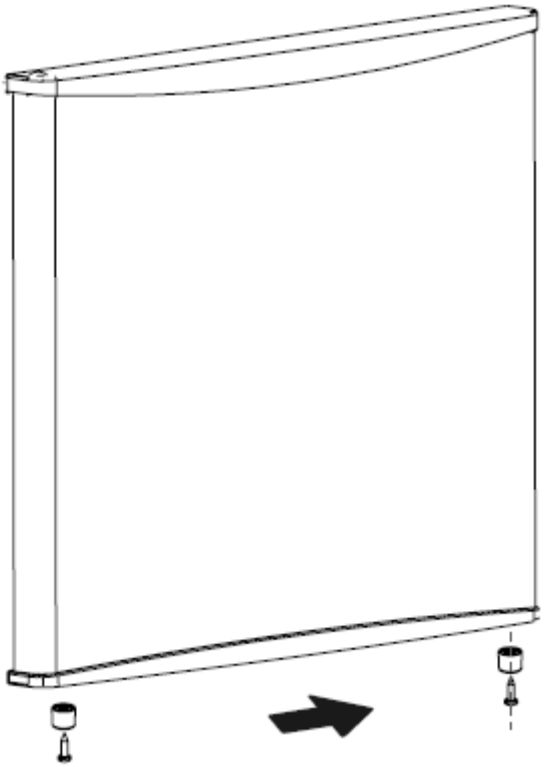

4. Remove the lower hinge assembly and the adjustable foot.

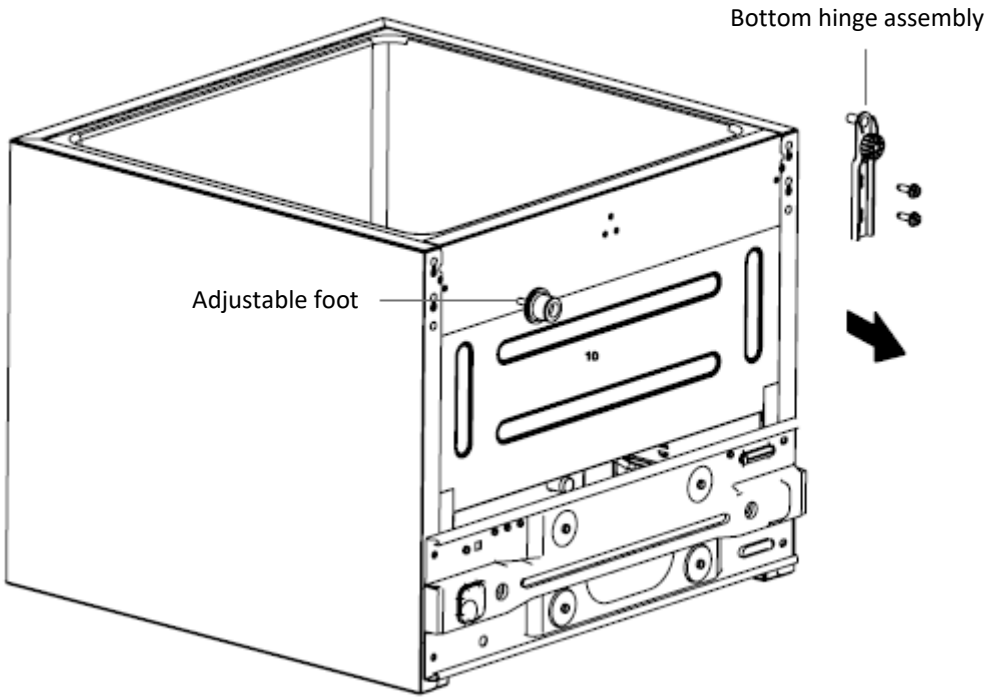

5. Install the lower hinge and adjustable foot on the lower left side of the cabinet and on the lower right side, respectively.

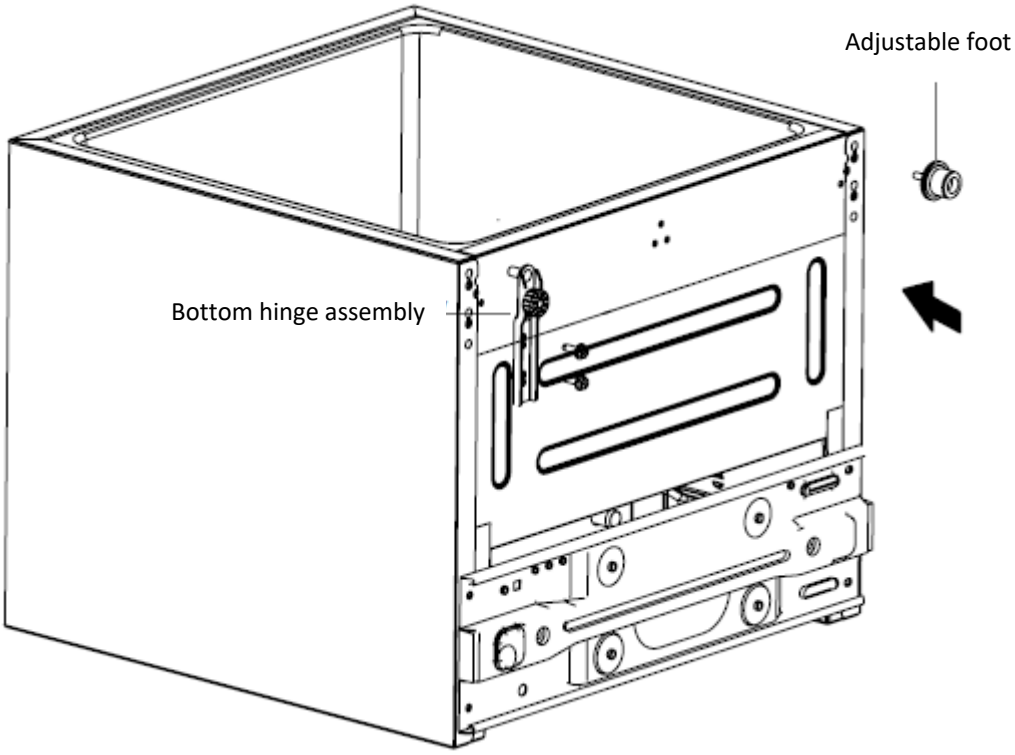

6. Place the door in a vertical position on the lower hinge and check the tightness of the door seal, then install the upper hinge, securing the screws and hinge cover, and finally cover the holes on the upper right with caps.

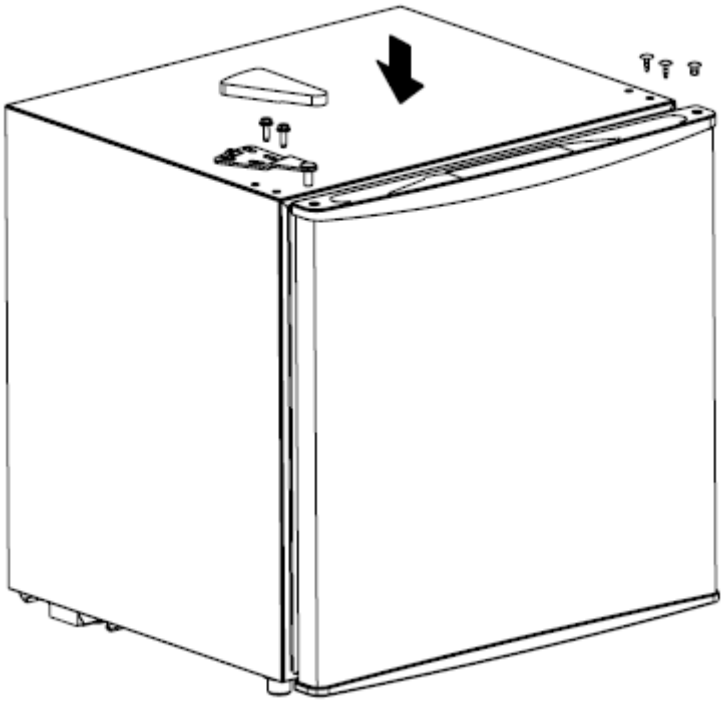

The above pictures are for information purposes only. The actual product may differ slightly from the one shown in the illustration.

Levelling feet

To avoid vibration, the appliance must be levelled.
If required, adjust the levelling feet to compensate for the uneven floor.
The front should be slightly higher than the rear to aid in door closing.
Levelling feet can be turned easily by tipping the cabinet slightly.

Turn the levelling feet counterclockwise  to raise the unit, clockwise  to lower it.

Moving the appliance

1. Remove all items from the appliance.
2. Pull the power plug out, insert and fix it into the power plug hook at the rear or on top of the appliance.
3. Tape parts such as shelves and the door to prevent from falling off while moving the appliance.
4. Move the appliance with more than two people carefully. When transporting the appliance over a long distance, keep the appliance upright.

Tips for energy saving

Do not place the appliance near cookers, radiators or other heat sources. If the ambient temperature is high, the compressor will run more frequently and for longer, resulting in increased energy consumption.
Ensure that there is sufficient ventilation at the base of the appliance, on the sides of the appliance and at the back of the appliance.
Please also observe the spacing dimensions in the chapter “Installation”.
The arrangement of drawers, shelves and trays as shown in the product overview offers the most efficient use of energy and should be retained as far as possible.

To obtain a larger storage space (e.g. for large refrigerated/frozen goods), the middle drawers and shelves can be removed. The top and bottom drawers and shelves should be removed last if necessary.
An evenly filled refrigerator/freezer compartment contributes to optimal energy use.
Allow warm food to cool before placing it in the refrigerator/freezer compartment. Food that has already cooled down increases energy efficiency.
Allow frozen food to defrost in the refrigeration compartment. The coldness of the frozen food reduces the energy consumption in the refrigerator compartment and thus increases energy efficiency.
Open the door only as briefly as necessary to minimise cold loss. Opening the door briefly and closing it properly reduces energy consumption.
Setting the temperature no colder than necessary contributes to optimal energy use.
The door gaskets of your appliance must be perfectly intact so that the doors close properly and energy consumption is not increased unnecessarily.

6. CONTROL PANEL

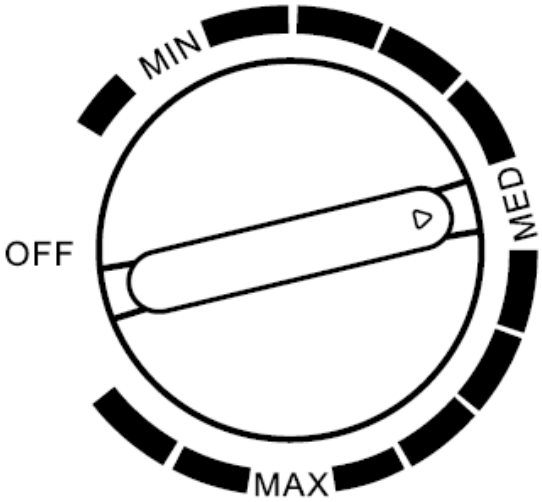

- "OFF" setting: the appliance is turned off
- "MIN" setting: not very low temperature
- "MED" setting: normal operation (suitable for most situations)
- "MAX" setting: lowest temperature

In case of high ambient temperatures (e.g., on hot summer days), it may be necessary to set the thermostat to a low temperature (the "MAX" position). This may cause the compressor to run continuously in order to maintain a low temperature inside the appliance.
Before placing food in the appliance, wait until it has cooled down completely. We recommend waiting 24 hours before placing food in the appliance. The temperature is adjusted using the thermostat knob. If the temperature control knob is in the OFF position, the appliance will not operate.

- Recommended setting: MED

ATTENTION
Depending on the purchased model, the control panel may be slightly different.

7. STORING FOOD

Cooling compartment

To reduce moisture and subsequent ice build-up, never place liquids in the fridge in unsealed containers. Frost tends to concentrate in the coolest parts of the evaporator. Storing liquids uncovered will result in more frequent defrosting.
Never place hot food in the refrigerator. Allow them to cool to room temperature before placing them in the refrigerator to ensure proper air circulation.
Food or food containers should not touch the back of the refrigerator as they may freeze to the wall. Do not open the fridge door regularly.
Meat and clean fish (packaged or wrapped in plastic) can be placed in the refrigerator for 1-2 days.
Unwrapped fruit and vegetables can be placed in the fresh fruit and vegetables section.

Storage times and compartment

Note: Overlong storage or storage at inappropriate freezing temperature may cause a quality loss or spoiled foods, which causes food waste, is inedible and may cause food poisoning. The minimum temperature in most cases should be -18 °C or colder.

Order	Compartments TYPE	Target storage temp. [℃]	Appropriate food
1	Fridge	+2≤+6	Eggs, cooked food, packaged food, fruits and vegetables, dairy products, cakes, drinks and other foods are not suitable for freezing.
2	(***)*-Freezer	≤-18	Seafood (fish, shrimp, shellfish), freshwater aquatic products and meat products (recommended for 3 months, the longer the storage time, the worse the taste and nutrition), suitable for frozen fresh food.
3	***-Freezer	≤-18	Seafood (fish, shrimp, shellfish), freshwater aquatic products and meat products (recommended for 3 months, the longer the storage time, the worse the taste and nutrition), are not suitable for frozen fresh food.
4	**-Freezer	≤-12	Seafood (fish, shrimp, shellfish), freshwater aquatic products and meat products (recommended for 2 months, the longer the storage time, the worse the taste and nutrition), are not suitable for frozen fresh food.
5	*-Freezer	≤-6	Seafood (fish, shrimp, shellfish), freshwater aquatic products and meat products (recommended for 1 months, the longer the storage time, the worse the taste and nutrition), are not suitable for frozen fresh food.
6	0-star	-6≤0	Fresh pork, beef, fish, chicken, some packaged processed foods, etc. (Recommended to eat within the same day, preferably no more than 3 days). Partially encapsulated processed foods (non-freezable foods)
7	Chill	-2≤+3	Fresh/frozen pork, beef, chicken, freshwater aquatic products, etc.(7 days below 0 ℃ and above 0 ℃ is recommended for consumption within that day, preferably no more than 2 days). Seafood (less than 0 for 15 days, it is not recommended to store above 0 ℃).

8	Fresh Food	0≤+4	Fresh pork, beef, fish, chicken, cooked food, etc. (Recommended to eat within the same day, preferably no more than 3 days).
9	Wine	+5≤+20	Red wine, white wine, sparkling wine, etc.

8. MAINTENANCE AND CLEANING

CAUTION

Disconnect the appliance from the power supply before conducting routine maintenance. Wait at least 5 minutes before restarting the appliance, as frequent starting may damage the compressor.
Do not use mechanical devices or other means to speed up the defrosting process other than those recommended by the manufacturer.
Do not attempt to repair, disassemble or modify the unit yourself. In case of repair, please contact our service department.
Remove the dust from the back of the appliance at least once a year to prevent fire hazard and increased energy consumption.
Check the door seal regularly to ensure that it is free of debris. Clean the door seal with a soft cloth dampened with soapy water or diluted detergent.
The interior of the product should be cleaned regularly to prevent odours.
Use a soft cloth or sponge to clean the inside of the product with two tablespoons of baking soda and a quart of warm water. Rinse with water and wipe clean.
After cleaning, open the door and allow it to dry naturally before switching on.
For areas of the product that are difficult to clean (such as tight spaces, crevices or corners), it is recommended to regularly wipe with a soft cloth, soft brush, etc. and, if necessary, combined with some auxiliary tools (such as thin sticks) to ensure that no dirt or bacteria accumulates in these areas.
Wipe the outer surface of the product with a soft cloth dampened with soapy water, detergent, etc. and then wipe dry.
Do not use hard brushes, clean steel balls, wire brushes, abrasives (such as toothpaste), organic solvents (such as alcohol, acetone, isoamyl acetate, etc.), boiling water, acidic or alkaline substances that may damage the surface and interior of the refrigerator. Boiling water and organic solvents such as benzene can deform or damage plastic parts.



During cleaning, do not rinse the appliance directly with water or other liquids to avoid short circuits or damage to electrical insulation.

ATTENTION

We recommend that you let the appliance run continuously after turning it on. As a general rule, the operation of the appliance should not be interrupted in order not to affect its service life.

Defrosting

1. Turn off the appliance.
2. Remove the food from the appliance and place it in a space where it will not defrost.
3. Clean the drainpipe (do not use abrasive materials). Prepare the containers for defrosting (carefully clean the water drain tray in the compressor area, avoiding spilling water on the floor).
4. You can let the appliance defrost naturally, but you can also use a scraper to remove the ice (use a wooden or plastic scraper to avoid damaging the appliance components).
5. To speed up the defrosting process, you can also use an appropriate amount of hot water. To remove the water resulting from defrosting, you can use a dry towel.
6. After defrosting, place the food in the appropriate compartments and turn on the appliance.

9. TROUBLESHOOTING

The following simple issues can be handled by the user. Please call the after-sale service department if the issues are not solved.

Problem	Possible causes	Solution
The appliance does not operate.	The power supply is not turned on and the plug is not firmly inserted. Low voltage, power failure or part of the circuit tripped.	Insert the power cord plug firmly. Check the power supply at home.
Compressor working for a long time	High ambient temperature causing long working time. Putting too much food in at one time. Food is put in before it has cooled down. Opening the door too often. The frost layer inside is too thick.	This is normal. Do not put too much food in at one time. Wait until the food has cooled down before putting it in. Do not open the door too often. Need to defrost.
Door does not close properly	Door is stuck with objects. Too much food in. Door gasket deformed.	Do not put in too much food. Place the appliance stably. Heat the door gasket, then cool it for restoration (with an electrical drier or hot water for heating).
Outer wall is hot	When the appliance is operating, heat is dissipated to the outside through the metal tubes inside the cabinet. Higher ambient temperatures in the summer cause the temperature of the outer wall to rise.	Higher temperature on the outer wall is normal. Increase the heat dissipation space or put the appliance in a ventilated and cool place.
Odors	Spoiled food Food with strong odours The interior compartment is dirty.	Clean and remove any spoiled food. Make sure strong-smelling food is wrapped airtight. Clean the interior compartment.
Condensation forms on the outside	Condensation may form when the humidity in the room is high.	This is normal. Wipe off the condensation using a dry cloth.

Hard to open the door	The difference in air pressure between the inside and outside of the compartment may sometimes make it hard to open the freezer door.	Wait a few moments, and then try to open the door slowly.

During normal use of the device, certain noises may be heard, which do not affect its proper operation.
Noises that can easily be prevented:

- Noise caused by the appliance not being level - level the appliance using the adjustable front feet. Alternatively, put soft material protectors under the rear castors, especially when the appliance is placed on tiles.
- The appliance touches neighbouring items of furniture - move the appliance.
- Drawers or shelves creak - remove and replace the drawer or shelf.
- Sound of bottles clinking together - move bottles away from each other.

The sounds you may hear during normal use are mainly caused by the compressor and cooling system running (turning on) (thermal expansion and contraction of the radiator caused by the flow of coolant).

CUSTOMER CARE AND SERVICE
Always use original spare parts.
When contacting our Authorised Service Centre, ensure that you have the following data available: Model and Serial Number.
The information can be found on the rating plate. Subject to change without notice.
TECHNICAL DATA
The technical information is situated in the rating plate on the internal side of the appliance and on the energy label.
The QR code on the energy label supplied with the appliance provides a web link to the information related to the performance of the appliance in the EU EPREL database.
Keep the energy label for reference together with the user manual and all other documents provided with this appliance.
It is also possible to find the same information in EPREL using the link https:// eprel.ec.europa.eu and the model name and product number that you find on the rating plate of the appliance.
To access information about your product in the EPREL portal, you can scan the codes below:

Thank you for purchasing this product. If you need support with your product, visit our website using the links below.
Get User manuals: https://www.heinner.ro
Get Service information: https://www.heinner.ro



Environment friendly disposal
You can help protect the environment!
Please remember to respect the local regulations: hand in the non-working electrical equipment's to an appropriate waste disposal centre.



HEINNER is a registered trademark of **Network One Distribution SRL**. Other brands and product names are trademarks or registered trademarks of their respective holders.
No part of the specifications may be reproduced in any form or by any means or used to make any derivative such as translation, transformation, or adaptation without permission from NETWORK ONE DISTRIBUTION.
Copyright © 2013 Network One Distibution. All rights reserved.
www.heinner.com, http://www.nod.ro



This product is in conformity with norms and standards of European Community



Producer and Importer: **Network One Distribution**
Marcel Iancu Street, 3-5, Bucharest, Romania
Tel: +40 21 211 18 56, www.heinner.com , www.nod.ro