# MICROWAVE OVEN

Model:

**HMW-MD20IVWH**




- Microwave oven
- Total capacity: 19L

HEINNER

# 1. INTRODUCTION

Please read the instructions carefully and keep the manual for future information.

This manual is designed to give all necessary instructions concerning installation, use and maintenance of the unit. In order to operate the unit correctly and safely, please read this instruction manual carefully before installation and use.

# 2. CONTENT OF YOUR PACKAGE

- ➔ **Freestanding microwave oven**
- ➔ **User manual**
- ➔ **Warranty card**

# 3. CONTENT OF YOUR PACKAGE

## GENERAL

### WARNING: DO NOT OPERATE THE OVEN WITHOUT ANY LIQUID OR FOOD INSIDE THE OVEN. THIS WOULD DAMAGE THE OVEN.

**WARNING:** If the door or door seals are damaged, the oven must not be operated until it has been repaired by a trained person.

**WARNING:** It is hazardous for anyone other than a trained person to carry out any service or repair operation, which involves the removal of any cover, which gives protection against exposure to microwave energy. WARNING: Liquids or other food must not be heated in sealed containers since they are liable to explode but it is explosive. In the event of a leak due to damage of the cooler elements, move your fridge away from open flames or heat sources and ventilate the room where the appliance is located for a few minutes.

1. Only use utensils that are suitable for use in microwave ovens.
2. Metallic containers for food and beverages are not allowed during microwave cooking.
3. When heating food in plastic or paper containers, keep an eye on the oven due to the possibility of ignition.
4. The microwave oven is intended for heating food and beverages. Drying of food or clothing and heating of warming pads, slippers, sponges, damp cloth and similar may lead to risk of injury, ignition or fire.
5. If smoke is observed, switch off or unplug the appliance and keep the door closed in order to stifle any flames microwave heating of beverages can result in delayed eruptive boiling, therefore care has to be taken when handling the container.
6. The contents of feeding bottles and baby food jars are to be stirred or shaken and the temperature is to be checked before consumption, in order to avoid burns.
7. Eggs in their shell and whole hard-boiled eggs shall not be heated in microwave ovens since they may explode, even after microwave heating has ended.

8. Failure to maintain the oven in a clean condition could lead to deterioration of the surface that could adversely affect the life of the appliance and possibly result in a hazardous situation.
9. The appliance must not be placed in a cabinet.
10. Care should be taken not to displace the turntable when removing containers from the appliance.
11. The appliance shall not be cleaned with a steam cleaner.
12. The appliance must not be installed equal to or higher than 900 mm above the floor. Minimum height of free space necessary above the top surface of the oven: See the installation drawing.

**WARNING:** When the appliance is operated in combination mode, children should only use the oven under adult supervision due to the temperatures generated.

13. If the supply cord is damaged, it must be replaced by the manufacturer or its service agent or a similarly qualified person in order to avoid a hazard.
14. This appliance can be used by children aged from 8 years and above and persons with reduced physical, sensory or mental capabilities or lack of experience and knowledge if they have been given supervision or instruction concerning use of the appliance in a safe way and understand the hazards involved.
15. Children shall not play with the appliance.
16. Cleaning and user maintenance shall not be done by children without supervision.
17. The plug must be remained easily accessible after installation of the appliance.
18. This appliance must not be placed in a cabinet with a door.
19. This product internal light source LED light on < 60lm.
20. During use the appliances become hot. Care should be taken to avoid touching heating elements inside the oven.

**WARNING:** Accessible parts may become hot during use. Young children should be kept away.

**WARNING:** The appliance and its accessible parts become hot during use.

21. Care should be taken to avoid touching heating elements.
22. Children less than 8 years of age shall be kept away unless continuously supervised.
23. Do not use harsh abrasive cleaners or sharp metal scrapers to clean the oven door glass since they can scratch the surface, which may result in shattering of the glass.
24. The appliance must not be installed behind a decorative door in order to avoid overheating. This appliance can be used by children aged from 8 years and above and persons with reduced physical, sensory or mental capabilities or lack of experience and knowledge if they have been given supervision or instruction concerning use of the appliance in a safe way and understand the hazards involved. Children shall not play with the appliance. Cleaning and user maintenance shall not be done by children without details indicating the correct installation of the shelves.

## NOTES:

• Please read the instruction manual carefully before installing and using your appliance. We are not responsible for the damage which occurred due to misuse.

• Follow all instructions on your appliance and instruction manual and keep this manual in a safe place to resolve the problems that may occur in the future.

• This appliance is produced to be used in homes and it can only be used in domestic environments and for specified purposes. It is not suitable for commercial or common use. Such use will cause the guarantee of the appliance to be cancelled and our company will not be responsible for losses incurred.

• This appliance is produced to be used in houses and it is only suitable for cooling / storing food. It is not suitable for commercial or common use and/or for storing substances except for food. Our company is not responsible for losses to be incurred in the contrary case.

# 4. PRODUCT DESCRIPTION

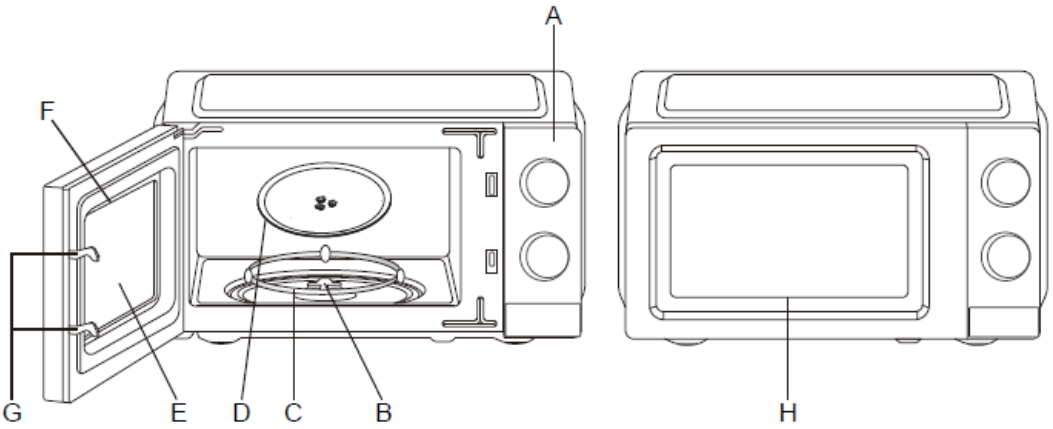


A. Control panel
B. Turntable shaft
C. Turntable ting assembly
D. Glass tray
E. Observation window
F. Door assembly
G. Saftey interlock system
H. PET door

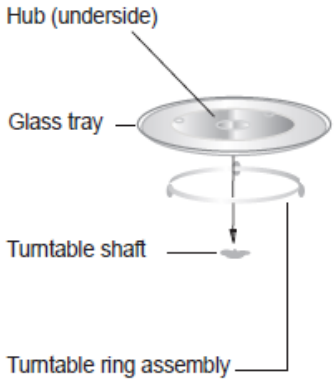


a. Never place the glass tray upside down. The glassvtray should never be restricted.
b. Both glass tray and turntable ring assembly mustvalways be used during cooking.
c. All food and containers of food are always placed on the glass tray for cooking.
d. If glass tray or turntable ring assembly cracks or breaks, contact your nearest authorized service center.

# 5. INSTALLATION

1.Select a level surface thatprovide enough open space for the intake and/or outlet vents.

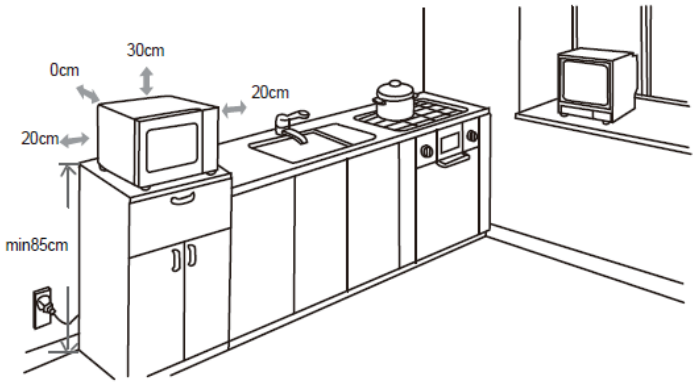


(1) The minimum installation height is 85cm.
(2) The rear surface of appliance shall be placed
against a wall. Leave a minimum clearance of 30cm above the oven, a minimum clearance of 20cm is required between the oven and any adjacent walls.
(3) Do not remove the legs from the bottom of the oven.
(4) Blocking the intake and/ or outlet openings can damage the oven.
(5) Place the oven as far away from radios and TV as possible. Operation of microwave oven may cause interference to your radio or TV reception.
2. Plug your oven into a standard household outlet.
Be sure the voltage and the frequency is the same as the voltage and the frequency on the rating label.
WARNING: Do not install oven over a range cooktop or other heat-producing appliance. If installed near or over a heat source, the oven could be damaged and the warranty would be void.

# 6. OPERATION OF CONTROL PANEL

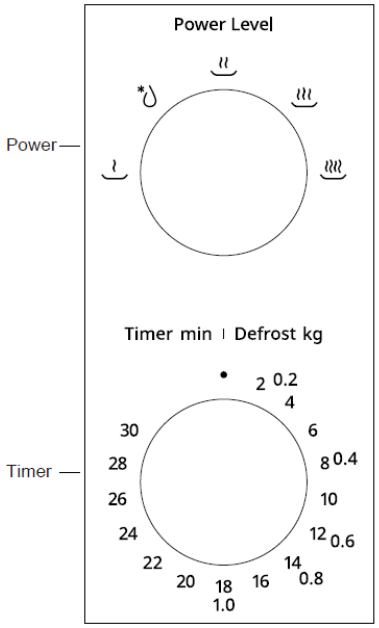

1.To set cooking power by turning the power knob to desired level.
2.To set the time of cooking by turning the timer knob to desired time per your food cooking guide.
3.The microwave oven will automatically start cooking after the power level and time are set.
4.When the cooking time is up, the unit will "Dong" to stop.
5.If the unit is not in use, always set time to "0".

| Function/Power | Output Power | Application |
|---|---|---|
|  | 17% power output | Soften ice cream |
|  | 33% power output | Soup stew, soften butter or defrost |
|  | 55% power output | Stew, fish |
|  | 77% power output | Rice, fish, chicken, ground meat |
|  | 100% power output | Reheat, milk, boil water, vegetablea, beverage |

**Notice: When removing food from the oven, please ensure that the oven power is switched off by turning the timer switch to 0. Failure to do so, and operating the microwave oven without food in it, can result in overheating and damage to the magnetron.**

## USTENSILS GUIDLINE

Materials you can use in microwave oven:

| Utensils | Remarks |
|---|---|
| Browning dish | Follow manufacturer's instructions. The bottom of browning dish must be at least 3/16 inch (5mm) above the turntable. Incorrect usage may cause the turntable to break. |
| Dinnerware | Microwave-safe only. Follow manufacturer's instructions. Do not use cracked or chipped dishes. |
| Glass jars | Always remove lid. Use only to heat food until just warm. Most glass jars are not heat resistant and may break. |
| Glassware | Heat-resistant oven glassware only. Make sure there is no metallic trim. Do not use cracked or chipped dishes. |
| Oven cooking bags | Follow manufacturer's instructions. Do not close with metal tie. Make slits to allow steam to escape. |
| Paper plates and cups | Use for short–term cooking/warming only. Do not leave oven unattended while cooking. |
| Paper towels | Use to cover food for reheating and absorbing fat. Use with supervision for a short-term cooking only |
| Parchment paper | Use as a cover to prevent splattering or a wrap for steaming. |
| Plastic | Microwave-safe only. Follow the manufacturer's instructions. Should be labeled "Microwave Safe". Some plastic containers soften, as the food inside gets hot. "Boiling bags" and tightly closed plastic bags should be slit, pierced, or vented as directed by package |
| Plastic wrap | Microwave-safe only. Use to cover food during cooking to retain moisture. Do not allow plastic wrap to touch food. |
| Thermometers | Microwave-safe only (meat and candy thermometers). |
| Wax paper | Use as a cover to prevent splattering and retain moisture. |

Materials to be avoided in microwave oven

| Utensils | Remarks |
|---|---|
| Aluminum tray | May cause arcing. Transfer food into microwave-safe dish |
| Food carton with metal handle | May cause arcing. Transfer food into microwave-safe dish |
| Metal or metal-trimmed utensils | Metal shields the food from microwave energy. Metal trim may cause arcing. |
| Metal twist ties | May cause arcing and could cause a fire in the oven |
| Paper bags | May cause a fire in the oven. |
| Plastic foam | Plastic foam may melt or contaminate the liquid inside when exposed to high temperature. |
| Wood | Wood will dry out when used in the microwave oven and may split or crack |

## COOKING TIPS

The following factors may affect the cooking result:

**Food arrangement**
Place thicker areas towards the outside of dish, the thinner part towards the center and spread it evenly. Do not overlap if possible.

**Cooking time length**
Start cooking with a short time setting, evaluate it after it times out and extend it according to the actual need. Over cooking may result in smoke and burns.

**Cooking food evenly**
Food such as chicken, hamburger or steak should be turned once during cooking.
Depending on the type of food, if applicable, stir it from outside to center of dish once or twice during cooking.

**Allow standing time.**
After cooking times out, leave the food in the oven for an adequate length of time, this allows it to complete its cooking cycle and cooling it down in a gradual manner.

**Whether the food is done**
Color and hardness of food help to determine if it is done, these include:
- Steam coming out from all parts of food, not just the edge
- Joints of poultry can be moved easily
- Pork or poultry shows no signs of blood
- Fish is opaque and can be sliced easily with a fork

**Browning dish**
When using a browning dish or self-heating container, always place a heat-resistant insulator such as a porcelain plate under it to prevent damage to the turntable and rotating ring.

**Microwave safe plastic wrap**
When cooking food with high fat content, do not allow the plastic wrap come into contact with food as it may melt

**Microwave safe plastic cookware**

Some microwave safe plastic cookware might not be suitable for cooking foods with high fat and sugar content. Also, the preheating time specified in the dish instruction manual must not be exceeded.

# 7. CLEANING AND MAINTANACE

## CLEANING

Be sure to unplug the appliance from the power supply.

1. Clean the cavity of the oven after using with a slightly damp cloth.
2. Clean the accessories in the usual way in soapy water.
3. The door frame and seal and neighbouring parts must be cleaned carefully with a damp cloth when they are dirty.
4. Do not use harsh abrasive cleaners or sharp metal scrapers to clean the oven door glass since they can scratch the surface, which may result in shattering of the glass.
5. Cleaning Tip---For easier cleaning of the cavity walls that the food cooked can touch: Place half a lemon in a bowl, add 300ml (1/2 pint) water and heat on 100% microwave power for 10 minutes. Wipe the oven clean using a soft, dry cloth.

Utensil Test:

1. Fill a microwave-safe container with 1 cup of cold water (250ml) along with the utensil in question.
2. Cook on maximum power for 1 minute.
3. Carefully feel the utensil. If the empty utensil is warm, do not use it for microwave cooking.
4. Do not exceed 1 minute cooking time.

**SERVICING SAFEGUARDS**

**Caution:** MICROWAVE RADIATION

1. The high voltage capacitor remains charged after disconnection; short the negative terminal of H. V capacitor to the oven chassis (use a screwdriver) to discharge before touching.
2. During servicing below listed parts are liable to be removed and give access to potentials above 250V to earth.
   - Magnetron
   - High voltage transformer
   - High voltage capacitor
   - High voltage diode
   - High voltage fuse
3. The following conditions may cause undue microwave exposure during servicing.
   - Improper fitting of magnetron.
   - Improper matching of door interlock, door hinge and door.
   - Improper fitting of switch support.
   - Door, door seal or enclosure has been damaged.

# 8. TROUBLESHOOTING

| Normal | |
|---|---|
| Microwave oven interfering TV reception | Radio and TV reception may be interfered when microwave oven operating. It is similar to the interference of small electrical appliances, like mixer, vacuum cleaner, and electric fan.<br>It is normal. |
| Dim oven light | In low power microwave cooking, oven light may become dim.<br>It is normal. |
| Steam accumulating on door, hot air out of vents | In cooking, steam may come out of food. Most will get out from vents. But some may accumulate on cool place like oven door.<br>It is normal |
| Oven started accidentally with no food in. | It is forbidden to run the unit without any food inside.<br>It is very dangerous. |

| **Trouble** | **Possible Cause** | **Remedy** |
|---|---|---|
| Oven cannot be started. | Power cord is not plugged in tightly | Unplug. Then plug again after 10 seconds. |
| | Fuse blowing or circuit breaker works. | Replace fuse or reset circuit breaker (repaired by professional personnel of our company) |
| | Trouble with outlet | Test outlet with other electrical appliances. |
| Oven does not heat. | Door is not closed well. | Close door well. |

## CUSTOMER CARE AND SERVICE

Always use original spare parts.
When contacting our Authorized Service Centre, ensure that you have the following data available: Model and Serial Number.
The information can be found on the rating plate. Subject to change without notice.

## TECHNICAL DATA

| | |
|---|---|
| Model | HMW-MD20IWH |
| Rated Voltage | 230-240 V~ 50 Hz |
| Microwave Input | 1020 W |
| Microwave Output | 700 W |

**Environment friendly disposal**

You can help protect the environment!

Please remember to respect the local regulations: hand in the non-working electrical equipment's to an appropriate waste disposal center.

**HEINNER** is a registered trademark of **Network One Distribution SRL**. Other brands and product names are trademarks or registered trademarks of their respective holders.

No part of the specifications may be reproduced in any form or by any means or used to make any derivative such as translation, transformation, or adaptation without permission from NETWORK ONE DISTRIBUTION.

Copyright © 2013 Network One Distibution. All rights reserved.

www.heinner.com, http://www.nod.ro

This product is in conformity with norms and standards of European Community

Importer: **Network One Distribution**

Marcel Iancu Street, 3-5, Bucharest, Romania

Tel: +40 21 211 18 56, www.heinner.com , www.nod.ro