SIDE BY SIDE

Model:

HSBS-HM600MDNFDXE++



- Total capacity: 600 L
- Energy class: E

HEINNER

1. INTRODUCTION

Please read the instructions carefully and keep the manual for future information.
This manual is designed to give all necessary instructions concerning installation, use and maintenance of the unit. In order to operate the unit correctly and safely, please read this instruction manual carefully before installation and use.

2. CONTENT OF YOUR PACKAGE

- ➔ **Side by side**
- ➔ **User manual**
- ➔ **Certificate of warranty**

3. SAFETY INFORMATION

In the interest of your safety and to ensure the correct use, before installing and first using the appliance, read this user manual carefully, including its hints and warnings. To avoid unnecessary mistakes and accidents, it is important to ensure that all people using the appliance are thoroughly familiar with its operation and safety features. Save these instructions and make sure that they remain with the appliance if it is moved or sold, so that everyone using it through its life will be properly informed on appliance use and safety. For the safety of life and property keep the precautions of these user's instructions as the manufacturer is not responsible for damages caused by omission.

Children and vulnerable people safety

- This appliance can be used by children aged from 8 years and above and persons with reduced physical, sensory, or mental capabilities or lack of experience and knowledge if they have been given super vision or instruction concerning use of the appliance in a safe way and understand the hazards involved.
- Children aged from 3 to 8 years are allowed to load and unload refrigerating appliances.
- Children should be supervised to ensure that they do not play with the appliance.
- Cleaning and user maintenance shall not be made by children unless they are aged from 8 years and above and supervised.
- Keep all packaging well away from children. There is risk of suffocation.
- If you are discarding the appliance pull the plug out of the socket, cut the connection cable (as close to the appliance as you can) and remove the door to prevent playing children to suffer electric shock or to close themselves into it.
- If this appliance featuring magnetic door seals is to replace an older appliance having a spring lock (latch) on the door or lid, be sure to make that spring lack unusable before you discard the old appliance. This will prevent it from becoming a death trap for a child.

General safety

WARNING! Keep ventilation openings, in the appliance enclosure or in the built-in structure, clear of obstruction.
WARNING! Do not use mechanical devices or other means to accelerate the defrosting process, other than those recommended by the manufacturer.
WARNING! Do not damage the refrigerant circuit.
WARNING! Do not use other electrical appliances (such as ice cream makers) inside of refrigerating appliances unless they are approved for this purpose by the manufacture.

WARNING! Do not touch the light bulb if it has been on for a long period of time because it could be very hot.
WARNING! When positioning the appliance, ensure the supply cord is not trapped or damaged.
WARNING! Do not locate multiple portable socket-outlets or portable power supplies at the rear of the appliance.
WARNING! The refrigerant and insulation blowing gas are flammable. When disposing of the appliance, do so only at an authorized waste disposal centre. Do not expose to flame.

- Do not store explosive substances such as aerosol cans with a flammable propellant in this appliance.
- The refrigerant isobutane (R600a) is contained within the refrigerant circuit of the appliance, a natural gas with a high level of environmental compatibility, which is nevertheless flammable.
- During transportation and installation of the appliance, be certain that none of the components of the refrigerant circuit become damaged.
    - Avoid open flames and sources of ignition
    - Thoroughly ventilate the room in which the appliance is situated
- It is dangerous to alter the specifications or modify this product in any way. Any damage to the cord may cause a short circuit, fire and/or electric shock.
- This appliance is intended to be used in household and similar applications such as:
    - staff kitchen areas in shops, offices, and other working environments;
    - farmhouses and by clients in hotels, motels, and other residential type environments;
    - bed and breakfast type environments;
    - catering and similar non-retail applications.

WARNING! Any electrical components (plug, power cord, compressor and etc.) must be replaced by a certified service agent or qualified service personnel.
WARNING! The light bulb supplied with this appliance is a “special use lamp bulb” usable only with the appliance supplied. This “special use lamp” is not usable for domestic lighting.
WARNING! The illuminating lamps must not be replaced by the user! If the illuminating lamps is damaged, contact the customer helpline for assistance. This warning is only for refrigerators that contain illuminating lamps.

- Power cord must not be lengthened.
- Make sure that the power plug is not squashed or damaged by the back of the appliance. A squashed or damaged power plug may overheat and cause a fire.
- Make sure that you can come to the mains plug of the appliance.
- Do not pull the mains cable.
- If the power plug socket is loose, do not insert the power plug. There is a risk of electric shock or fire.
- You must not operate the appliance without the lamp.
- This appliance is heavy. Care should be taken when moving it.
- Do not remove nor touch items from the freezer compartment if your hands are damp/wet, as this could cause skin abrasions or frost/freezer burns.
- Avoid prolonged exposure of the appliance to direct sunlight.

Refrigerant

The refrigerant isobutene (R-600a) is contained within the refrigerant circuit of the appliance, a natural gas with a high level of environmental compatibility, which is nevertheless flammable. During transportation and installation of the appliance, ensure that none of the components of the refrigerant circuit becomes damaged. The refrigerant (R-600a) is flammable.
WARNING! Refrigerators contain refrigerant and gases in the insulation. Refrigerant and gases must be disposed of professionally as they may cause eye injuries or ignition.
Ensure that tubing of the refrigerant circuit is not damage prior to proper disposal.

**WARNING!** Risk of fire
If the refrigerant circuit should be damaged:

- Avoid opening flames and sources of ignition.

- Thoroughly ventilate the room in which the appliance is situated.

Daily use

- Do not put hot objects on the plastic parts in the appliance.
- Do not place food products directly against the rear wall.
- Frozen food must not be re-frozen once it has been thawed out.
- Store pre-packed frozen food in accordance with the frozen food manufacturers instructions.
- Appliance's manufactures storage recommendations should be strictly adhered to. Refer to relevant instructions.
- Do not place carbonated of fizzy drinks in the freezer compartment as it creates pressure on the container, which may cause it to explode, resulting in damage to the appliance.
- Ice lollies can cause frost burns if consumed straight from the appliance. [1)]
- To avoid contamination of food, please respect the following instructions:
    - Opening the door for long periods can cause a significant increase of the temperature in the compartments of the appliance.
    - Clean regularly surfaces that can come in contact with food and accessible drainage systems.
    - Clean water tanks if they have not been used for 48 h; flush the water system connected to a water supply if water has not been drawn for 5 days.
    - Store raw meat and fish in suitable containers in the refrigerator, so that it is not in contact with or drip onto other food.
    - Two-star frozen-food compartments (if they are presented in the appliance) are suitable for storing pre-frozen food, storing, or making ice- cream and making ice cubes.
    - One-, two- and three-star compartments are not suitable for the freezing of fresh food.
    - If the appliance is left empty for long periods, switch off, defrost, clean, dry, and leave the door open to prevent mould developing within the appliance.

Care and cleaning

- Before maintenance, switch off the appliance and disconnect the mains plug from the mains socket.
- Do not clean the appliance with metal objects.
- Do not use sharp objects to remove frost from the appliance. Use a plastic scraper.
- Regularly examine the drain in the refrigerator for defrosted water. If necessary, clean the drain. If the drain is blocked, water will collect in the bottom of the appliance.

Installation

Important! For electrical connection carefully follow the instructions given in specific paragraphs.

- Unpack the appliance and check if there are damages on it. Do not connect the appliance if it is damaged. Report possible damages immediately to the place you bought it. In that case retain packing.
- It is advisable to wait at least four hours before connecting the appliance to allow the oil to flow back in the compressor.
- Adequate air circulation should be around the appliance, lacking this leads to overheating. To achieve sufficient ventilation, follow the instructions relevant to installation.
- Wherever possible the spacers of the product should be against a wall to avoid touching or catching warm parts (compressor, con-denser) to prevent possible burn.
- The appliance must not be located close to radiators or cookers.
- Make sure that the mains plug is accessible after the installation of the appliance.

Service

- Any electrical work required to do the servicing of the appliance should be carried out by a qualified electrician or competent person.
- This product must be serviced by an authorized Service Centre, and only genuine spare parts must be used.

Energy saving

- Don’t put hot food in the appliance.
- Don’t pack food close together as this prevents air circulating.
- Make sure food don’t touch the back of the compartment(s).
- If electricity goes off, don’t open the door(s).
- Don’t open the door(s) frequently.
- Don’t keep the door(s) open for too long time.
- Don’t set the thermostat on exceeding cold temperatures.
- All accessories, such as drawers, shelves, door balconies should be kept in original place for lower energy consumption.

Environment protection

This appliance does not contain gasses which could damage the ozone layer, in either its refrigerant circuit or insulation materials. The appliance shall not be discarded together with the urban refuse and rubbish. The insulation foam contains flammable gases: the appliance shall be disposed according to the appliance regulations to obtain from your local authorities. Avoid damaging the cooling unit, especially the heat exchanger. The materials used on this appliance marked by the symbol  are recyclable.

Packaging materials

The materials with the symbol are recyclable. Dispose the packaging in a suitable collection container to recycle it.

Disposal of the appliance

1. Disconnect the mains plug from the mains socket.
2. Cut off the mains cable and discard it.

**Warning!** During using, service and disposal the appliance, please pay attention to symbol similar as left side, which is located on rear of appliance (rear panel or compressor) and with yellow or orange colour. It’s risk of fire warning symbol. There are flammable materials in refrigerant pipes and compressor.
Please be far away from fire source during using, service and disposal.

4. PRODUCT DESCRIPTION

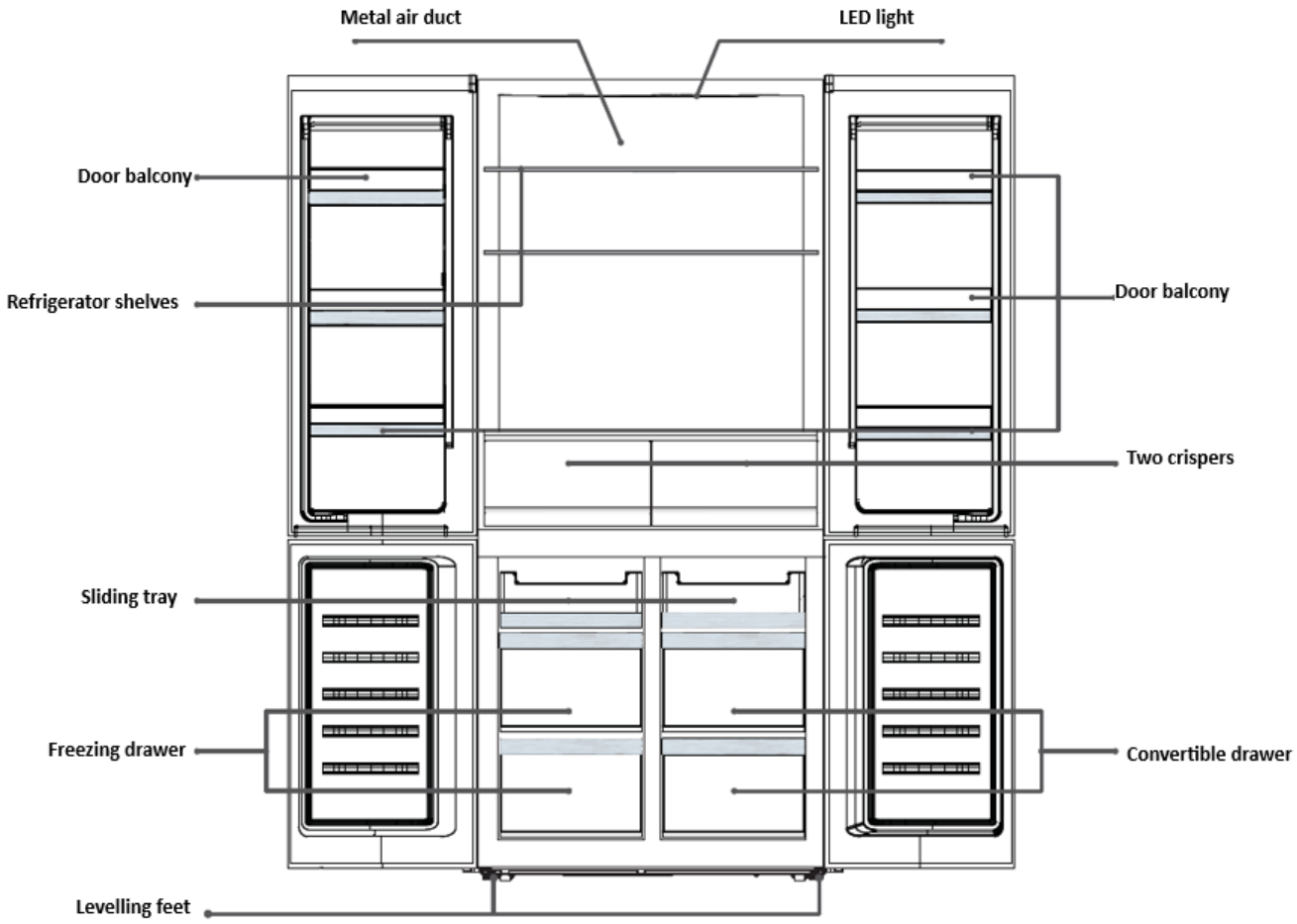

The illustrations in this manual are for information purposes only. As such, the actual product may differ slightly from that shown in the illustrations.

5. INSTALLATION

Space requirement

Keep enough space of door open.

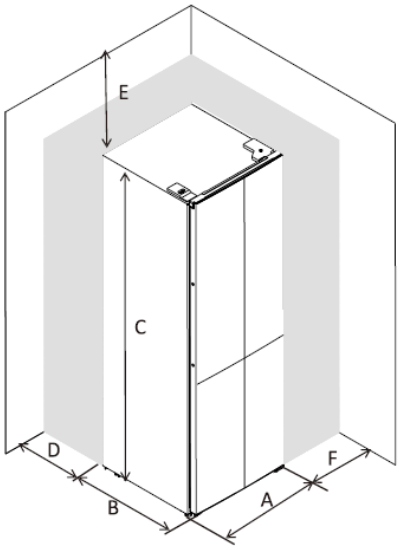

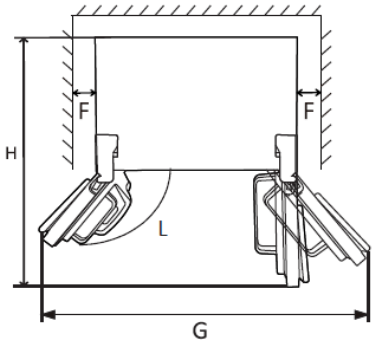

A	905
B	673
C	1900
D	min=50
E	min=50
F	min=50
G	1515
H	1062
L	130°

Alignment of doors

After transport or after the door balconies are loaded with food or drinks, the upper doors may not be level. Three Grower washers are used to adjust the doors. Please follow the procedure below for aligning the doors.



1. Before checking the alignment of the doors, make sure the appliance is positioned properly.
2. If the two upper doors are not aligned, lift the lower door a little and insert a Grower washer between the centre hinge and the bottom of the door.

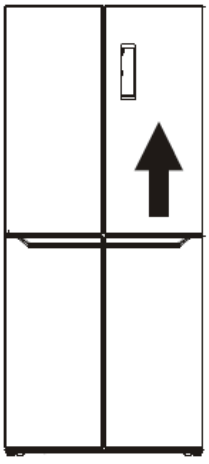

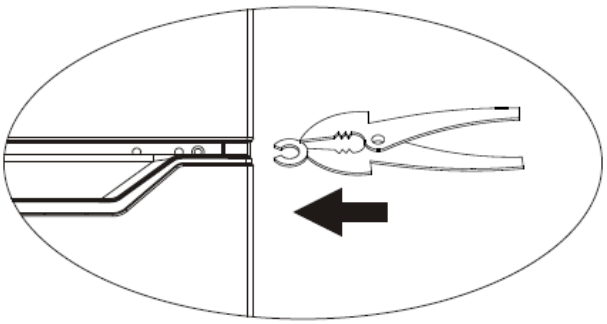

Warning! Take care that the door does not catch your fingers. Please use a tool.
Warning! Do not leave Grower washers within reach of children to avoid their being swallowed by children. These are small components.

Rubber blocks

Each door is fitted with a rubber block. These reduce the intensity of the impact when the door closes.

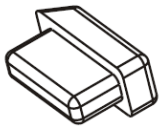

Please do not pull the rubber blocks. If they are missing from the doors, please take the necessary blocks from the accessory bag and insert them into the specially provided holes on the doors.

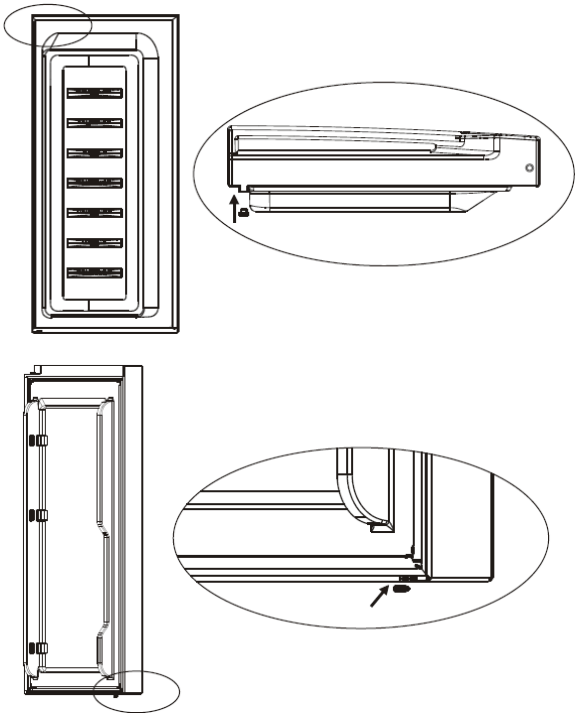

Warning! Do not leave rubber blocks within reach of children to avoid their being swallowed by children. These are small components.

Levelling the refrigerator

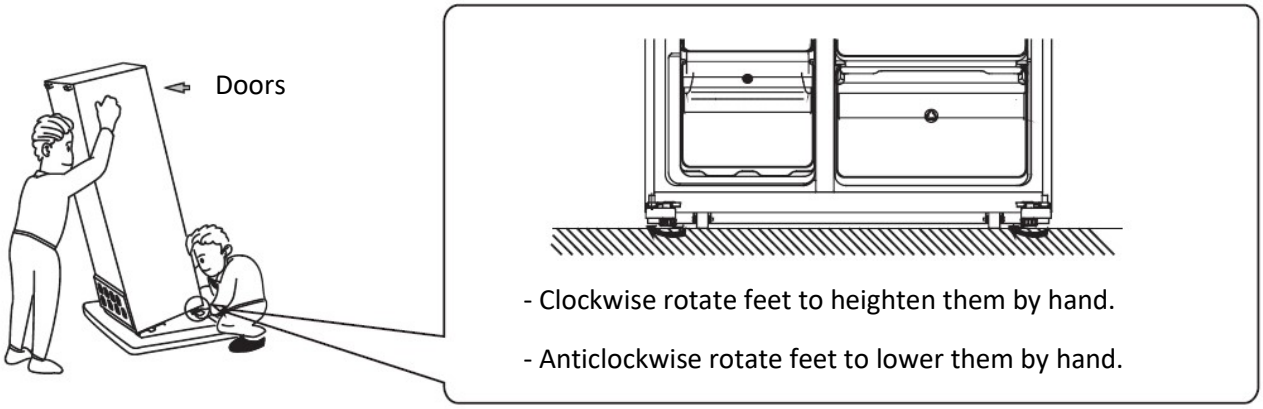

Positioning

Install this appliance at a location where the ambient temperature corresponds to the climate class indicated on the rating plate of the appliance:
For refrigerating appliances with climate class:

- extended temperate: this refrigerating appliance is intended to be used at ambient temperatures ranging from 10 °C to 32 °C (SN);
- temperate: this refrigerating appliance is intended to be used at ambient temperatures ranging from 16 °C to 32 °C (N);
- subtropical: this refrigerating appliance is intended to be used at ambient temperatures ranging from 16 °C to 38 °C (ST);
- tropical: this refrigerating appliance is intended to be used at ambient temperatures ranging from 16 °C to 43 °C (T).

Location

The appliance should be installed well away from sources of heat such as radiators, boilers, direct sunlight etc. Ensure that air can circulate freely around the back of the cabinet. To ensure best performance, if the appliance is positioned below an overhanging wall unit, the minimum distance between the top of the cabinet and the wall unit must be at least 100 mm. Ideally, however, the appliance should not be positioned below overhanging wall units. Accurate levelling is ensured by one or more adjustable feet at the base of the cabinet.
This refrigerating appliance is not intended to be used as a built-in appliance.
Warning! It must be possible to disconnect the appliance from the mains power supply; the plug must therefore be easily accessible after installation.

Electrical connection

If the socket in your home is not earthed, connect the appliance to a separate earthing system in accordance with the regulations in force, after consulting a qualified electrician.
The manufacturer assumes no liability if these safety measures are not observed.
This appliance complies with the EC Directives.

6. DAILY USE

Control panel

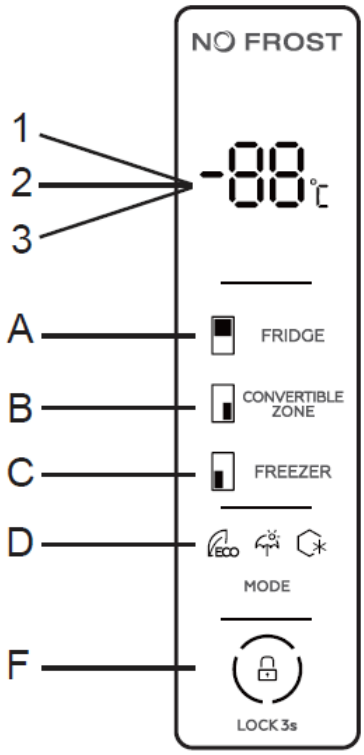

1.1 Button functions

A. Setting the temperature in the refrigeration compartment
B. Setting the temperature in the convertible compartment
C. Setting the temperature in the freezer compartment
D. Setting the operating mode (ECO, Holiday, Super freezing)
F. Locking/Unlocking the control panel

1.2 LED display

1. Refrigeration compartment temperature
2. Freezer compartment temperature
3. Convertible compartment temperature

2. Operating conditions

1. The control panel lights up completely for 3 seconds, then displays the settings (mode and temperature) set before the appliance was switched off. The system locks automatically 25 seconds after the last button press. After locking, the display turns off 120 seconds after the last button press.
2. The temperature in the refrigeration/freezer/convertible compartment will be displayed separately by setting the temperature of each zone.

Display

- The panel will stay on for 2 minutes once the refrigeration compartment door or freezer compartment door is opened (the door signals are transmitted in turn).
- The panel will turn on at the touch of any button and turn off 2 minutes after the last button press.
- The display will behave like this during normal operation.
  - Refrigeration compartment temperature display: the temperature of the current setting is shown
  - Freezer compartment temperature display: the current temperature setting is shown
  - Temperature display in the convertible compartment: the temperature of the current setting is shown

3. Using the temperature control knob

3.1 Refrigeration compartment temperature control

a) Refrigeration compartment temperature control

This button is functional in both user-defined and "Super" mode. After entering the refrigeration compartment temperature control mode, this button lights up flashing. By pressing the button consecutively, the temperature will change successively from 2 °C to 3 °C, 4 °C, 5 °C, 6 °C, 7 °C, 8 °C, - - (Off). If the button flashes for 5 seconds, the temperature selection is set.

b. Switching off the refrigeration compartment

Press the button for "Refrigeration compartment temperature control" and select "- -". The button flashes for 5 seconds, which means that the setting has been selected and the operation of the refrigeration compartment is stopped.

3.2 Freezer compartment temperature control

Freezer compartment temperature control This button is functional in both a user-defined mode and in "Holiday" mode.

After entering the freezer compartment temperature control mode, this button will flash. By pressing the button consecutively, the temperature will change successively from -14 °C to -15 °C, -16 °C, -17 °C, -18 °C, -19 °C, -20 °C, -21 °C, -22 °C. If the button flashes for 5 seconds, the temperature selection is set.

3.3 Convertible compartment temperature control

a. Convertible compartment temperature control:

This button is functional in both user-defined and other modes of operation. After entering the convertible compartment temperature control mode, this button shall light up flashing. By pressing the button consecutively, the temperature will change successively from 5 °C to 4 °C, 3 °C, 2 °C, 1 °C, 0 °C, -1 °C, -2 °C, -3 °C, -4 °C, -5 °C, -6 °C, -7 °C, -8 °C, -9 °C, -10 °C, -11 °C, -12 °C, -13 °C, -14 °C, -15 °C, -16 °C, -17 °C, -18 °C, -19 °C, -20 °C, --(Off). If the button flashes for 5 seconds, the temperature selection is set.

b. Switching off the convertible compartment

Press the button for "Convertible compartment temperature control" and select "- -". The button flashes for 5 seconds, which means that the setting has been selected and the operation of the convertible compartment is stopped.

3.4 Mode/Locking/Unlocking

a. Pressing this button consecutively will change the mode of operation of the refrigerator in the sequence "ECO" mode - "Holiday" mode - "Super" mode - User defined mode. If the button flashes for 5 seconds, the temperature selection is set.

b. Long press to activate/deactivate locking mode

- Unlocking: Press for 3 seconds when the device is in lock mode and the buttons will unlock after a short beep.
- Locking: Press for 3 seconds when the device is in unlock mode and the buttons will lock after a short beep.

3.5 Control panel buttons

A short beep will sound when any button is pressed. Buttons respond to commands only if the control panel is unlocked.

3.6 Lock function

If no operation is performed for 25 seconds, the control panel will automatically lock.

3.7 ECO mode

Press the "MODE" button to select "ECO" mode. The "ECO" icon flashes for 5 seconds and remains lit.

It is recommended that the temperature in the refrigeration compartment and freezer compartment be set according to the table below:

Ambient temperature(T)	T≤13 °C	13 °C<T≤20 °C	20 °C<T≤27 °C	27 °C<T≤34 °C	T>34°C
Refrigeration compartment temperature	3 °C	4 °C	5 °C	6 °C	8 °C
Freezer compartment temperature	-18 °C	-18 °C	-18 °C	-16 °C	-15 °C

The "FREEZER" and "FRIDGE" buttons do not work when "ECO" mode is active. The temperature of the convertible compartment can be adjusted separately.

Deactivating Eco mode: If you want to deactivate Eco mode, press the MODE button to select another mode.

3.8 "Holiday" mode

Press the "MODE" button to select "Holiday" mode. The icon flashes for 5 seconds and remains lit.

The temperature will be set to 17 °C in the refrigeration compartment. Pressing the "FRIDGE" button will have no effect, but the "Holiday" icon will flash for three seconds as a reminder.

The temperature of the freezer compartment and the convertible compartment can be adjusted separately.

Deactivating "Holiday" mode: If you want to deactivate "Holiday" mode, press the "MODE" button to select another mode.

3.9 "Super" mode

Press the "Mode" button to select "Super" mode. The icon flashes for 5 seconds and remains lit.

Super mode:

The temperature in the freezer compartment (-25 °C) cannot be adjusted. Pressing the "FREEZER" button will have no effect, but the icon will flash for 3 seconds as a reminder.

The temperature of the refrigeration compartment and the convertible compartment can be adjusted separately.

Super mode is deactivated as follows:

- manual deactivation of "Super" mode
- "Super" mode has been active for more than 50 hours

The mode remains the same before activating the "Super" mode.

4. Door opening alarm
If the refrigeration compartment door (upper door) remains open for more than 60 seconds, a warning beep will sound until the door is closed.

Multi-temperature zone

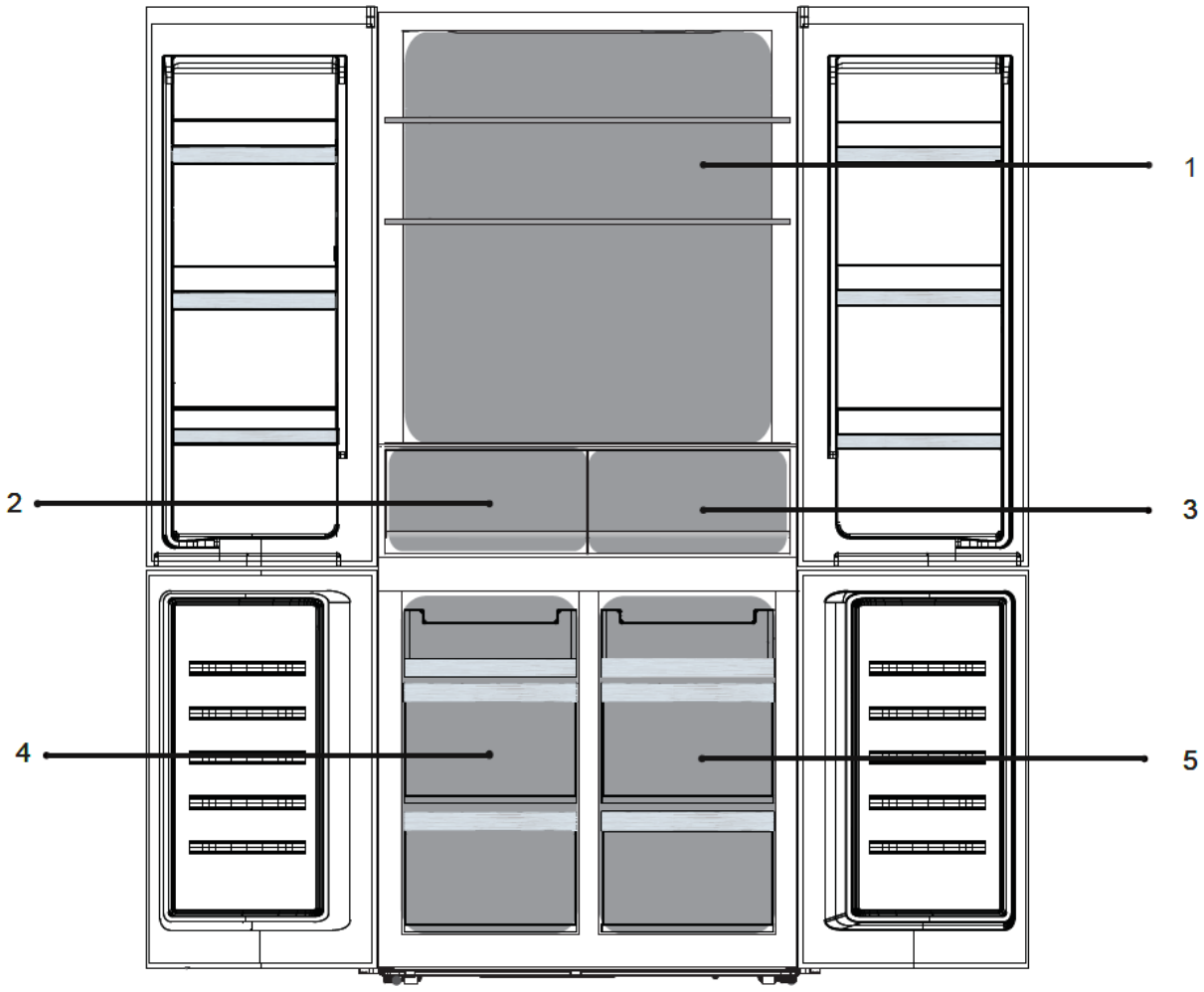

1. Refrigeration compartment temperature 2 °C~8 °C/Off
Controlled using the control panel.
2. Crisper temperature 2 °C~8 °C
3. Crisper temperature 2 °C~8 °C
4. Freezer compartment temperature -22 °C~-14 °C
Controlled using the control panel.
5. Convertible compartment temperature -20 °C~5 °C/Off
Controlled using the control panel.

First use – Cleaning the interior

Before using the appliance for the first time, wash the interior and all internal accessories with lukewarm water and some neutral soap so as to remove the typical smell of a brand-new product, then dry thoroughly.
Important! Do not use detergents or abrasive powders, as these will damage the finish.

Thawing

Deep-frozen or frozen food, prior to be used, can be thawed in the fridge compartment or at room temperature, depending on the time available for this operation.
Small pieces may even be cooked still frozen, directly from the freezer, in this case, cooking will take longer.

Movable shelves

The walls of the refrigerator are equipped with a series of runners so that the shelves can be positioned as desired.

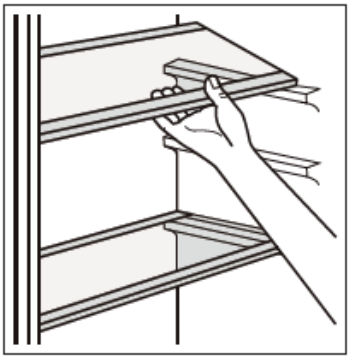

Positioning the door balconies

To facilitate the storage of food packages of different sizes, the door balconies can be positioned at different heights. To do this, proceed as follows: gently pull the balcony in the direction of the arrows until it pops out, then reposition it as desired.

Ice cubes

This appliance can be equipped with one or more trays for producing ice cubes.

Freezing fresh food

- The freezer compartment is suitable for freezing fresh food and storing frozen and deep-frozen food for a long time.
- Place the fresh food to be frozen in the freezer compartment.
- The maximum amount of food that can be frozen in 24 hours is specified on the rating plate.
- The freezing process lasts 24 hours: during this period do not add other food to be frozen.

Storing frozen food

When first starting-up or after a period out of use, before putting the product in the compartment let the appliance run at least 2 hours on the higher settings.
Important! In the event of accidental defrosting, for example the power has been off for longer than the value shown in the technical characteristics chart under “rising time”, the defrosted food must be consumed quickly or cooked immediately and then re-frozen (after cooked).

Temperature setting recommendation

Temperature setting recommendations		
Ambient temperature	Temperature setting	
Summer (above 38 °C)	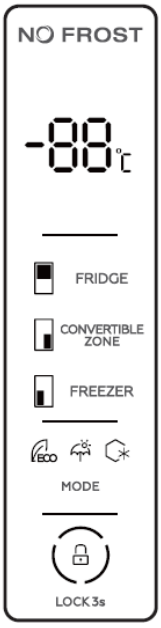	Refrigerator set on 2 °C
		Freezer set on -20 °C
Normal		Refrigerator set on 4 °C
		Freezer set on -18 °C
Winter (below 16 °C)		Refrigerator set on 5 °C
		Freezer set on -18 °C

Information above give users recommendation of temperature setting.
Temperature of convertible zone setting depends on food loading.

Food positioning

Position the different types of food in different compartments as shown in the table below:

Refrigerator compartments	Types of food
Balconies on refrigeration compartment door	Foods containing natural preservatives, such as jams, juices, drinks, spices. Do not store perishable foods.
Crisper compartment	Fruit, herbs and vegetables should be placed separately in the crisper bin. Do not store bananas, onions, potatoes or garlic in the fridge
Refrigerator shelf	Dairy products, eggs, cakes, pasta, pizza Foods that do not need cooking, such as ready-to-eat foods, deli meats, leftovers.
Convertible compartment	-20 °C~5 °C, for a wide range of foods that can be frozen or chilled at variable temperatures. 3 °C~5 °C: fresh fruit and vegetables 0 °C~2 °C: drinks, beer, red wine -7 °C~-1 °C: refrigeration of foods such as raw meat, fish, seafood, dumplings, etc. for short-term storage. -20 °C~-8 °C: refrigeration of foods such as raw meat, fish, seafood, dumplings, etc. for long-term storage.

Freezing compartment	Foods for long-term storage. Seafood, fish, meat, dumplings, frozen baked goods

Order	Compartments TYPE	Target storage temp. [°C]	Appropriate food
1	Fridge	+2≤+6	Eggs, cooked food, packaged food, fruits and vegetables, dairy products, cakes, drinks, and other foods are not suitable for freezing.
2	(***)*-Freezer	≤-18	Seafood (fish, shrimp, shellfish), freshwater aquatic products and meat products (recommended for 3 months, the longer the storage time, the worse the taste and nutrition), suitable for frozen fresh food.
3	***-Freezer	≤-18	Seafood (fish, shrimp, shellfish), freshwater aquatic products and meat products (recommended for 3 months, the longer the storage time, the worse the taste and nutrition), are not suitable for frozen fresh food.
4	**-Freezer	≤-12	Seafood (fish, shrimp, shellfish), freshwater aquatic products and meat products (recommended for 2 months, the longer the storage time, the worse the taste and nutrition), are not suitable for frozen fresh food.
5	*-Freezer	≤-6	Seafood (fish, shrimp, shellfish), freshwater aquatic products and meat products (recommended for 1 months, the longer the storage time, the worse the taste and nutrition), are not suitable for frozen fresh food.
6	0-star	-6≤0	Fresh pork, beef, fish, chicken, some packaged processed foods, etc. (Recommended to eat within the same day, preferably no more than 3 days). Partially encapsulated processed foods (non-freezable foods)
7	Chill	-2≤+3	Fresh/frozen pork, beef, chicken, freshwater aquatic products, etc. (7 days below 0 ℃ and above 0 ℃ is recommended for consumption within that day, preferably no more than 2 days). Seafood (less than 0 for 15 days, it is not recommended to store above 0 ℃).
8	Fresh Food	0≤+4	Fresh pork, beef, fish, chicken, cooked food, etc. (Recommended to eat within the same day, preferably no more than 3 days).
9	Wine	+5≤+20	Red wine, white wine, sparkling wine, etc.

Impact on food storage

Under recommended setting, the best storage time of fridge is no more than 3 days.
Under recommended setting, the best storage time of freezer is no more than 1 month.
The best storage time may reduce under other settings.

7. HELPFUL HINTS AND TIPS

Hints for freezing

To help you make the most of the freezing process, here are some important hints:

- the maximum quantity of food which can be frozen in 24 hrs. is shown on the rating plate.
- the freezing process takes 24 hours. No further food to be frozen should be added during this period.
- only freeze top quality, fresh and thoroughly cleaned foodstuffs.
- prepare food in small portions to enable it to be rapidly and completely frozen and to make it possible subsequently to thaw only the quantity required.
- wrap up the food in aluminium foil or polythene and make sure that the packages are airtight.
- do not allow fresh, unfrozen food to touch food which is already frozen, thus avoiding a rise in temperature of the latter.
- lean foods store better and longer than fatty ones; salt reduces the storage life of food.
- water ices, if consumed immediately after removal from the freezer compartment, can possibly cause the skin to be freeze burnt.
- it is advisable to show the freezing in date on each individual pack to enable you to remove it from the freezer compartment, can possibly cause the skin to be freeze burnt.
- it is advisable to show the freezing in date on each individual pack to enable you to keep tab of the storage time.

Hints for storage of frozen food

To obtain the best performance from this appliance, you should:

- make sure that the commercially frozen foodstuffs were adequately stored by the retailer.
- be sure that frozen foodstuffs are transferred from the food store to the freezer in the shortest possible time.
- do not open the door frequently or leave it open longer than absolutely necessary.
- once defrosted, food deteriorates rapidly and cannot be refrozen.
- do not exceed the storage period indicated by the food manufacture.

Hints for refrigeration of fresh food

For optimal performance:

- Do not store warm food or evaporating liquids in the appliance.
- Cover or wrap food, particularly if it has a strong flavour.
- Make (all types): wrap in polythene bags and place on the glass shelves above the vegetable drawer.
- For safety, store meat this way only for a day or two at most.
- Cooked foods cold dishes etc.: these should be covered and may be placed on any shelf.
- Fruit and vegetables: these should be thoroughly cleaned and placed in the special drawer(s) provided.
- Butter and cheese: these should be placed in special airtight containers or wrapped in aluminium foil or polythene bags to exclude as much air as possible.
- Milk bottles: these should have a cap and should be stored in the balconies on the door.
- If not packed, bananas, potatoes, onions and garlic should not be stored in the refrigerator.

Cleaning

For hygienic reasons the appliance interior, including interior accessories, should be cleaned regularly.
Caution! The appliance may not be connected to the mains during cleaning. Danger of electrical shock! Before cleaning switch, the appliance off and remove the plug from the mains, or switch off or turn out the

circuit breaker or fuse. Never clean the appliance with a steam cleaner. Moisture could accumulate in electrical components, danger of electrical shock! Hot vapours can lead to the damage of plastic parts. The appliance must be dry before it is placed back into service.
Important! Ethereal oils and organic solvents can attack plastic parts, e.g. lemon juice or the juice form orange peel, butyric acid, cleanser that contain acetic acid.

- Do not allow such substances to come into contact the appliance parts.
- Do not use any abrasive cleaners.
- Remove the food from the freezer. Store them in a cool place, well covered.
- Switch the appliance off and remove the plug from the mains, or switch off or turn out the circuit breaker of fuse.
- Clean the appliance and the interior accessories with a cloth and lukewarm water. After cleaning wipe with fresh water and rub dry.
- After everything is dry place appliance back into service.

Description of the "No Frost" function

This appliance is fitted with a "No frost" function and defrosting takes place automatically.

8. TROUBLESHOOTING

If you are experiencing problems with your appliance or are concerned that it is not working properly, you can follow the recommendations below to carry out some checks before calling for specialist technical support.
Caution! Before troubleshooting disconnect the power supply. Only a qualified electrician must do the troubleshooting that is not in this user manual.
Important! There are some sounds during normal use (compressor, refrigerant circulation).

Problem	Possible cause	Solution
Appliance does not work	Mains plug in not plugged in or is loose	Insert mains plug
	Fuse has blown or is defective	Check fuse, replace if necessary
	Socket is defective	Mains malfunctions are to be corrected by an electrician
Appliance freezes or cools to much	Temperature is set too cold or the appliance runs at SUPER modes.	Turn the temperature regulator to a warmer setting temporarily.
The food is not frozen enough	Temperature is not properly adjusted	Please look at the initial temperature setting section
	Door was open for an extended period	Open the door only as long as necessary
	A large quantity of warm food was placed in the appliance within the las 24 hours	Turn the temperature regulator to a colder setting temporarily
	The appliance is near a heat source	Please look in the installation location section
Heavy build-up of frost on the door seal	Door seal is not airtight	Carefully warm the leaking sections of the door seal with a hair dryer (on a cool setting). At the same time shape the warmed door seal by hand such thar it sits correctly
Water on the floor	Water drain hole is blocked	See the Cleaning and care section

Unusual noises	Appliance is not level	Re-adjust the feet
	The appliance is touching the wall or other objects	Move the appliance slightly
	A component, e.g. a pipe, on the rear is touching another part of the appliance or the wall	If necessary, carefully bend the component out of the way

If the malfunction occurs again, contact the authorised service centre.

CUSTOMER CARE AND SERVICE
Always use original spare parts.
When contacting our Authorised Service Centre, ensure that you have the following data available: Model and Serial Number.

The information can be found on the rating plate. Subject to change without notice.

TECHNICAL DATA
The technical information is situated in the rating plate on the internal side of the appliance and on the energy label.
The QR code on the energy label supplied with the appliance provides a web link to the information related to the performance of the appliance in the EU EPREL database.
Keep the energy label for reference together with the user manual and all other documents provided with this appliance.
It is also possible to find the same information in EPREL using the link https:// eprel.ec.europa.eu and the model name and product number that you find on the rating plate of the appliance.
To access information about your product in the EPREL portal, you can scan the codes below:

Thank you for purchasing this product. If you need support with your product, visit our website using the links below.
Get User manuals: https://www.heinner.ro
Get Service information: https://www.heinner.ro

Environment friendly disposal
You can help protect the environment!
Please remember to respect the local regulations: hand in the non-working electrical equipment's to an appropriate waste disposal center.

HEINNER is a registered trademark of **Network One Distribution SRL**. Other brands and product names are trademarks or registered trademarks of their respective holders.