AUTOMATIC WASHING MACHINE

Model:

HWM-M1014IVNA+++



- Automatic washing machine
- Loading capacity:10 kg
- Energy class: A

HEINNER

1. INTRODUCTION

Please read the instructions carefully and keep the manual for future information.

This manual is designed to give all necessary instructions concerning installation, use and maintenance of the unit. In order to operate the unit correctly and safely, please read this instruction manual carefully before installation and use.

2. CONTENT OF YOUR PACKAGE

- ➔ **Automatic washing machine**
- ➔ **User manual**
- ➔ **Warranty certificate**

3. SAFETY MEASUREMENTS

GENERAL

Please read the following safety information thoroughly and follow it strictly to minimize the risk of fire or explosion, electric shock and to prevent property damage, personal injury or loss of life. Failing to follow these instructions shall void any warranty.

•The appliance can be used by children aged 8 years and above and people with reduced physical, sensory, or mental capabilities or lack of experience and knowledge if they have been given supervision or instruction concerning use of the appliance in a safe way and understand the hazards involved. Children should not play with the appliance. Cleaning and user maintenance shall not be done by children without supervision.
•Children should be supervised so that they do not play with the appliance.
•Children 3 years and under shall be kept away from the appliance or continuously supervised.
•Animals and children may climb into the machine. Check the machine before every operation.
•Do not climb or sit on the appliance
•All washing and additional substances are to be kept in a safe place out of the reach of children.
•Do not install the machine on a carpet floor. The obstruction of the openings by carpet can damage the machine.
•Keep the appliance clear from heating sources and direct sunlight to avoid plastic and rubber parts corroding.
•Do not use the appliance in humid environments or rooms containing explosive or caustic gas. In case of water leakage or water splashes let the appliance dry in the open air.
•The appliance must not be installed behind a lockable door, a sliding door or a door with a hinge on the opposite side to that of the washing machine.

•Do not operate the machine in rooms with a temperature of below 5°C. This can cause damage to parts of it. If it is unavoidable, make sure to drain the water completely from the appliance after every use to avoid damage caused by frost.
•Never use flammable sprays or substances in the immediate proximity of the appliance.
•If the supply cord is damaged, it must be replaced by the manufacturer, its service agent or similarly qualified people in order to avoid a hazard.
•If the machine is damaged, it must not be operated unless repaired by the manufacturer, its service agent or similarly qualified persons. Risk of electric shock!

INSTALATION

•Remove all the packaging material and transport bolts before using the appliance. Otherwise, serious damage may result.
•This appliance is equipped with a single inlet valve and can be connected to the cold-water supply only.
•Mains plug must be accessible after installation.
•Before washing clothes for the first time, the product shall be operated once throughout all the procedures without any clothes inside.
•Before using the washing machine, the product shall be calibrated.
•Do not put any excessively heavy objects on the appliance, like water containers or heating devices.
•The new hose-sets supplied with the appliance are to be used and that old hose-sets should not be reused.
•Max. Inlet water pressure 1 MPa. Min. inlet water pressure 0.05MPa.

ELECTRICAL CONNECTION

•Make sure the supply cable is not trapped by the machine; it can get damaged.
•Connect the product to a grounded outlet protected by a fuse complying with the values in the “Technical specifications “table. The grounding installation has to be done by a qualified electrician. Ensure that the machine is installed in accordance with the local regulations.
WARNING!
•Don´t use multiple plugs or extension cords.
•The appliance must not have an external switching device such as a timer or connected to a circuit that is regularly switched on and off.
•Do not pull the plug out of the mains outlet if there is flammable gas around.
•Never pull out the power plug with wet hands.
•Always pull at the plug, not at the cable.
•Always unplug the appliance if it is not being used.

WATER CONNECTIONS

•Check the connections of the water inlet tubes, the water taps and the outlet hose for possible problems due to changes of water pressure. If the connections loosen or leak close the water tap and get it repaired. Do not use the appliance before the pipes and hoses are installed properly by qualified people.
•Glass door may become very hot during the operation. Keep children and pets far away from the machine while it is operating.
•The water inlet and outlet hoses have to be safely installed and remain undamaged. Otherwise, water leakage can occur.

•Do not remove the drain pump filter while there is still water in the appliance. Big quantities of water can leak out, and there is a risk of scalding due to hot water.

OPERATION AND MAINTENANCE

•Never use any flammable, explosive or toxic solvents. Do not use gasoline and alcohol etc. as detergents. Only select detergents that are suitable for machine washing.
•Make sure that all pockets are emptied. Sharp and rigid items such as coins, brooches, nails, screws, stones etc. may cause serious damage to this machine.
•Remove all objects from pockets such as lighters and matches before using the appliance.
•Thoroughly rinse items that have been washed by hand.
•Items that have been soiled with substances such as cooking oil, acetone, alcohol, petrol, kerosene, spot removers, turpentine, wax and wax removers should be washed in heat with an extra amount of detergent before being dried in the appliance.
•Items containing foam rubber (latex foam), shower caps, waterproof textiles, rubber-backed articles and clothes or pillows fitted with foam rubber pads should not be dried in the machine
•Fabric softeners or similar products should be used as recommended in their instructions.
•Never try to open the door forcefully. The door will unlock shortly after the end of a cycle.
•Please do not close the door with excessive force. If it is difficult to close the door, please check if the clothes are properly inserted and distributed.
•Always unplug the appliance and close the water tap before cleaning and maintenance and after each use.
•Never pour water over the appliance for cleaning purposes. Risk of electric shock!
•Repairs shall only be carried out by the manufacturer, its service agent or similarly qualified people in order to avoid a hazard. The producer will not be responsible for damage caused by the intervention of non-authorized people.

TRANSPORT

•Before Transport:
-Bolts shall be reinstalled to the machine by a specialized person
–Accumulated water shall be drained out of the machine.
•This appliance is heavy.
•Transport with care.
•Never hold any protruding part of the machine when lifting.
•The machine door cannot be used as a handle.

INTENDED USE

The product is intended only for home use and for textiles in household amounts suitable for machine washing and drying. This appliance is for indoor use only and not intended for built in use. Only use according to these instructions. The appliance is not intended for commercial use. Any other use is considered improper use. The producer is not responsible for any damage or injuries that may result of it.
•This appliance is intended to be used in household and similar applications such as:
-Staff kitchen areas in shops, offices and other working environments.
-Farm houses.
-By clients in hotels, motels and other residential type environments.

-Bed and breakfast type environments.
-Areas for communal use in blocks of flats or in launderettes.

4. PRODUCT DESCRIPTION

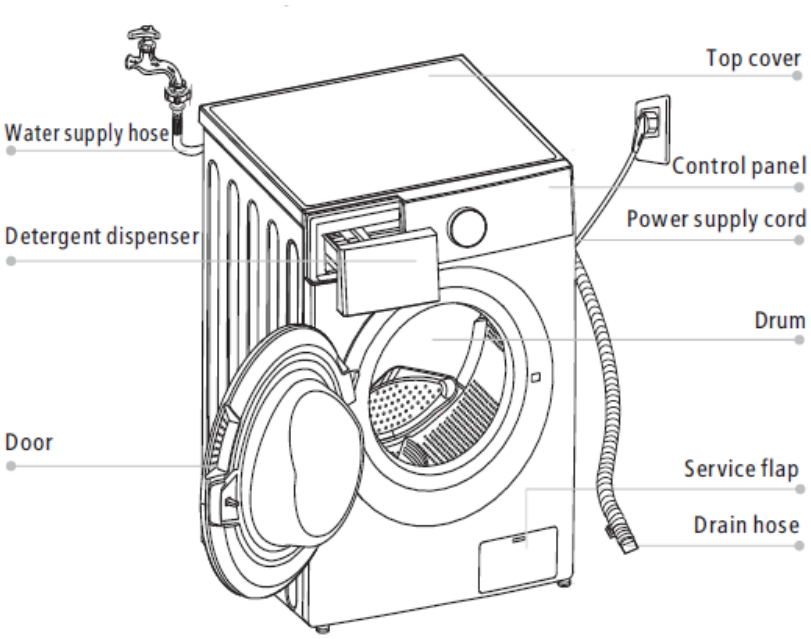

Accessories

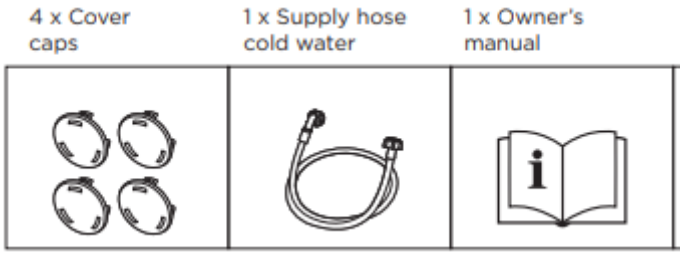

5. CONTROL PANEL

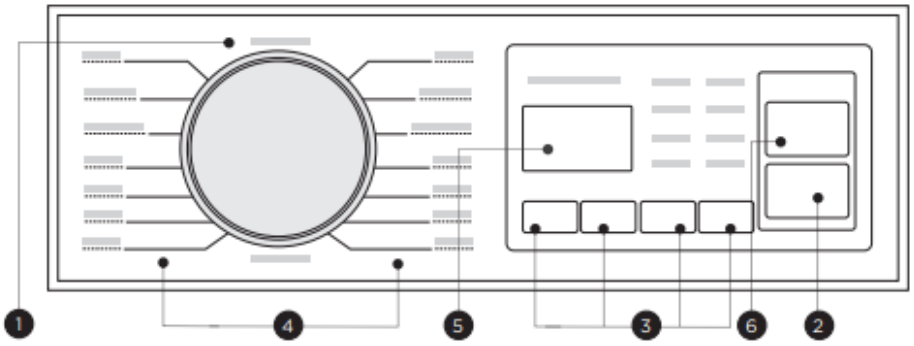

1. Power
   Product is on/off.
2. Start/Pause
   Press the button to start or pause the washing cycle.
3. Option
   This allows you to select an additional function and will light when selected.
4. Programs
   Available according to the laundry type.
5. Display
   The display shows the settings, estimated time remaining, options, and status messages for your washer. The display will remain on throughout the cycle.
6. Drum Clean
   Especially set in this machine to clean the drum and tube.

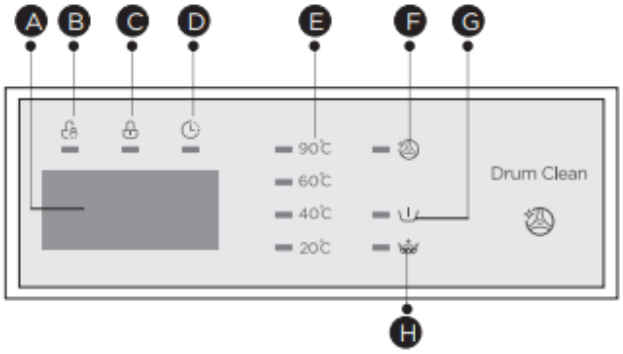

A – Display	E – Temperature
B – Child lock	F – Drum Clean
C – Door lock	G – Pre-Wash
D – Delay	H – Extra rinse

6. INSTALLATION

Installation area

• Stability is important to prevent the product from wandering!
•Make sure that the product should not stand on the power cord.
•Before installing the machine, the location characterized as follows shall be selected:
1.Rigid, dry, and level surface
2.Avoid direct sunlight
3.Sufficient ventilation
4.Room temperature is above 5℃
5.Keep far away from the heat resources such as coal or gas.

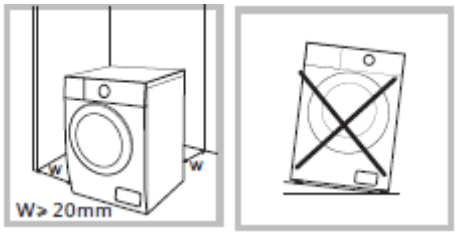

Unpacking the washing machine

• Packaging material (e.g. Films, Styrofoam) can be dangerous for children.
•There is a risk of suffocation!
•Keep all packaging well away from children.

1. Remove the cardboard box and styrofoam packing.
2. Lift the washing machine and remove the base packing. Make sure the small triangle foam is removed with the bottom one together. If not, lay the unit down with side surface, then remove the small foam from the unit bottom manually.
3. Remove the tape securing the power supply cord and drain hose.
4. Remove the inlet hose from the drum. Make sure the small triangle.



Remove transport bolts

• You must remove the transport bolts from the backside before using the product.
• You'll need the transport belts again if you move the, so make sure keep them in a safe place.

Please take the following steps to remove the bolts:
1.Loosen 4 bolts with spanner and then remove them.
2.Stop the holes with transport hole plugs.
3.Keep the transport bolts properly for future use.

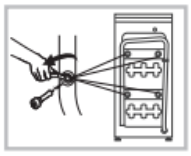



Loosen the 4 transport bolts with a spanner.



Remove the bolts including the rubber parts and keep them for future use.



Close the holes using the cover caps.

Levelling the washing machine

• The lock nuts on all four feet must be screwed tightly against the housing
1. Loosen the lock nut.
2. Turn your foot until it reaches the floor.
3. Adjust the legs and lock the nuts with a spanner. Make sure the machine is level and steady.



Connect the water supply hose!

To prevent leakage or water damage, follow the instructions.
• Do not kink, crush or modify water inlet hose.
• Connect manually, do not use tools. Check if the connections are tight.



Connect the water supply hose to the water inlet valve and a water tap with cold water as indicated.



Drain Hose

• Position drain hose properly, otherwise damage might result of water leakage.
•Do not kink or protract the drain hose
There are two ways to place the end of drain hose:

1.Put it into the water trough.

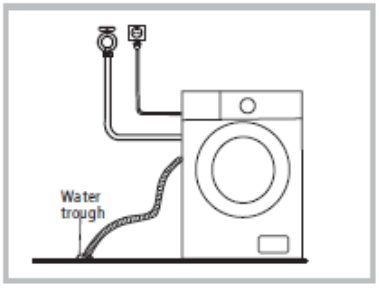

2.Connect it to the branch drain pipe of the trough.

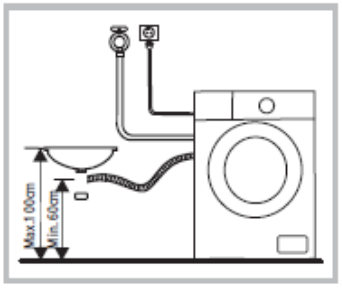

Accoustic sponge

• Please make sure to assemble the acoustic sponges, which can effectively reduce the noise caused by the machine while working, in order to provide you with a more peaceful and quiet living environment.

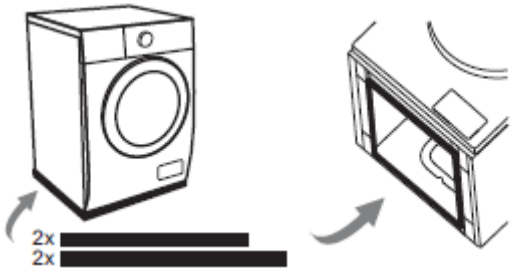

1. Get the machine lying on the floor, using some soft material like foam or clothes between the machine and floor for a protection.
2. Stick the 2x longer sponges to the longer bottom edges of machine, and the 2x shorter sponges to the shorter bottom edges.

7. OPERATION

• Before washing, please make sure the washing machine is installed properly.
• Your appliance was thoroughly checked before it left the factory. To remove any residual water and to neutralize potential odors, it's recommended to clean your appliance before first use. For this reason, start the Drum Clean program at without laundry and detergent.

Calibration

It's recommended to calibrate the machine, so that provide the best performance. The appliance is able to detect the amount of laundry loaded. This function is optimizing the product performance by minimizing energy and water consumption, saving you money and time. For this reason, it's recommended to calibrate the appliance for best use.

1- Remove all accessories from the drum and close the door.
2- Insert the mains plug to the socket.
3- Switch on the washing machine and press "Temp." and "Delay" simultaneously for 10 seconds until "t19" is displayed.
4- Press [⏯] to start the appliance and wait till "****" is displayed.

Before washing.

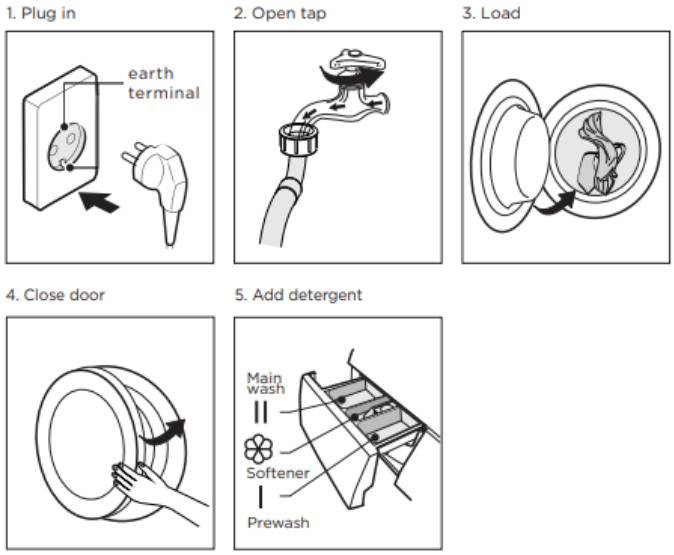

Washing and after washing

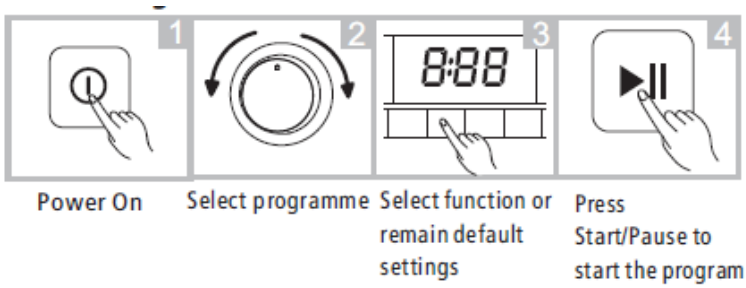

“End” on display.

Before Each Washing

• The ambient temperature of the washing machine should be 5-40°C. If used under 0°C, the inlet valve and draining system may be damaged. If the machine is installed under freezing conditions, it should be transferred to normal ambient temperature to ensure the water supply hose and drain hose can unfreeze before use.

• Please check your laundry care labels and the detergent use instructions before washing. Use non-foaming or less-foaming detergent suitable for machine washing properly.



• Do not wash or dry articles that have been cleaned in, washed in, soaked in, or dabbed with combustible or explosive substances like wax, oil, paint, gasoline, alcohol, kerosene, and other flammable materials.
• Washing single clothes items may easily create a big eccentricity and cause alarm due to unbalance. Therefore, it is suggested to add one or two more laundry items to the wash so that spin can be done smoothly.

Detergent Dispenser

I Pre wash
II Main wash
Softener
Release button to pull out the dispenser

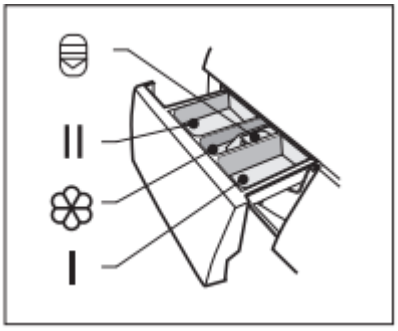

CAUTION
• Detergent only need to be added in compartment I ”after selecting pre-wash function.

Programme	I	II/💧	❀	Programme	I	II/💧	❀
Cotton	○	●	○	Bulky	○	●	○
Synthetic	○	●	○	Baby Care	○	●	○
Mix	○	●	○	Wool		●	○
Jeans	○	●	○	Sport Wear	○	●	○
Spin Only				Rapid 45'		●	○
Rinse & Spin			○	Quick 15'		●	○
ECO 40-60		●	○	Steam Wash	○	●	○
20°C		●	○	Drum Clean			

● Means must ○ Means optional

Detergent Recommendation

Recommended washing detergent	Wash cycles	Washing temp	Type of laundry and textile
Heavy-duty detergent with bleaching agents and optical brighteners	Cotton, ECO 40-60,	40/60	White laundry made from boil-proof cotton or linen
Color detergent without bleaching agent and optical brighteners	Cotton	20/40	Colored laundry made from cotton or linen
Color or mild detergent without optical brighteners	Synthetics, Cotton	20/40	Colored laundry made from easy care fibres or synthetic materials
Mild washing detergent	Synthetics	20	Delicate textiles, silk, viscose
Special wool detergent	Wool	20/40	Wool

•Agglomerating or ropy detergent or additive can be diluted in some water before pouring it into the detergent dispenser, to avoid its inlet getting blocked and thus cause a water overflow.
• Please choose the suitable type of detergent to get a maximum of washing performance and a minimum of water and energy consumption
• To achieve the best cleaning result a proper detergent dosing is important.
• Use a reduced detergent amount if the drum is not filled completely.
• Always adjust the amount of detergent to the water hardness, if your tap water is soft, use less detergent.
According to how dirty your laundry is, less dirty clothes require less detergent.
• Highly concentrated (compact detergent) requires particularly accurate dosing.
The following symptoms are a sign of detergent overdosing:
- heavy foam formation
- poor washing and rinsing result
The following symptoms are a sign of detergent underdosing:
- laundry turns grey
- built-up limescale deposits on the drum, the heating element and/or the laundry

Cycle	Nominal capacity in kg	Temperature setting	Cycle duration in hours and minutes	Energy consumption in kWh/operalling cycle	Water consumption in liter//operalling cycle	Highest temperature °C [1]	residual moitsure in % /spin speed [2]
Cotton	10.0	60	1:43	1.497	85	60	65%/1000
Mix	10.0	40	1:20	0.871	85	40	65%/1000
20℃	5.0	20	1:01	0.195	51	20	65%/1000
Baby Care	10.0	60	2:01	1.528	85	60	65%/1000
Quick 15'	2.0	Cold	0:15	0.03	31	Cold	70%/800
ECO 40-60 [3]	10.0	--	3:59	0.890	67.0	37	53.9%/1350
	5.0	--	3:00	0.549	52.0	35	53.9%/1350
	2.5	--	3:00	0.242	41.5	23	53.9%/1350

1) The highest temperature reached by the laundry in the wash cycle for at least 5 minutes.
2) Residual moisture after the wash cycle in water content percent and the spin speed at which this was achieved.
3) The ECO 40-60 programme is able to clean normally soiled cotton laundry declared to be washable at 40°C or 60°C, together in the same cycle. This programme is used to assess the compliance with the regulation (EU) 2019/2014, (EU) 2019/2023, (EU)2021/340, (EU) 2021/341.
The most efficient programmes in terms of energy consumption are generally those that perform at lower temperatures and longer duration.
Loading the household washer up to the capacity indicated for the respective programmes will contribute to energy and water savings.
Noise and remaining moisture content are influenced by the spinning speed: the higher the spinning speed in the spinning phase, the higher the noise and the lower the remaining moisture content.

Steam Wash	
Washing temperature	40°C, 60°C, 90°C
Maximum dry laundry amount	10 kg
Spin speed selection(rpm)	0, 400, 600, 800, 1000, 1200, 1400
Additional functions	
Default program duration (Min)	01:48
Laundry type / descriptions	The Steam Wash can deeply penetrate the fiber, which effectively eliminate bacterias and germs, preventing odors and protecting health.
Cotton	
Washing temperature	Cold, 20°C, 40°C, 60°C, 90°C
Maximum dry laundry amount	10 kg
Spin speed selection(rpm)	0, 400, 600, 800, 1000, 1200, 1400
Additional functions	
Default program duration (Min)	01:28
Laundry type / descriptions	Hard-wearing textiles, heat-resistant textiles made of cotton or linen.
Synthetic	
Washing temperature	Cold, 20°C, 40°C, 60°C
Maximum dry laundry amount	5 kg
Spin speed selection(rpm)	0, 400, 600, 800, 1000, 1200
Additional functions	
Default program duration (Min)	01:25
Laundry type / descriptions	Wash synthetic articles, for example: shirts, coats, blending. While washing the knitting textiles, detergent quantity shall be reduced due to its loose string construction and easily forming bubbles
Mix	
Washing temperature	Cold, 20°C, 40°C, 60°C, 90°C
Maximum dry laundry amount	10 kg
Spin speed selection(rpm)	0, 400, 600, 800, 1000, 1200, 1400
Additional functions	
Default program duration (Min)	01:20
Laundry type / descriptions	Mixed load consisting of textiles made of cotton and synthetics.
Jeans	
Washing temperature	Cold, 20°C, 40°C, 60°C
Maximum dry laundry amount	10 kg
Spin speed selection(rpm)	0, 400, 600, 800, 1000, 1200, 1400
Additional functions	
Default program duration (Min)	01:40
Laundry type / descriptions	Specially for jeans.
ECO 40-60	
Washing temperature	40°C
Maximum dry laundry amount	10 kg
Spin speed selection(rpm)	1400
Additional functions	
Default program duration (Min)	03:59
Laundry type / descriptions	Washing brightly colored clothes, it can protect the colors better. Default 40℃,not selectable,suitabale for laundry washing at about 40℃-60℃
20°C	
Washing temperature	Cold, 20°C
Maximum dry laundry amount	5 kg
Spin speed selection(rpm)	0, 400, 600, 800, 1000, 1200
Additional functions	
Default program duration (Min)	01:01
Laundry type / descriptions	20℃ default, can choose cold water

Spin Only	
Washing temperature	--
Maximum dry laundry amount	10 kg
Spin speed selection(rpm)	0, 400, 600, 800, 1000, 1200, 1400
Additional functions	
Default program duration (Min)	00:12
Laundry type / descriptions	Extra spin with selectable spin speed.
Rinse & Spin	
Washing temperature	--
Maximum dry laundry amount	10 kg
Spin speed selection(rpm)	0, 400, 600, 800, 1000, 1200, 1400
Additional functions	
Default program duration (Min)	00:20
Laundry type / descriptions	Extra rinse with spin.
Bulky	
Washing temperature	Cold, 20°C, 40°C, 60°C
Maximum dry laundry amount	10 kg
Spin speed selection(rpm)	0, 400, 600, 800, 1000, 1200, 1400
Additional functions	
Default program duration (Min)	01:48
Laundry type / descriptions	This program is specially designed for washing Bulky.
Baby Care	
Washing temperature	Cold, 20°C, 40°C, 60°C, 90°C
Maximum dry laundry amount	10 kg
Spin speed selection(rpm)	0, 400, 600, 800, 1000, 1200
Additional functions	
Default program duration (Min)	02:01
Laundry type / descriptions	Washing the baby’s clothes, it can make the baby's wear cleaner. and make the rinse performance better to protect the baby skin.
Wool	
Washing temperature	Cold, 20°C, 40°C
Maximum dry laundry amount	2 kg
Spin speed selection(rpm)	0, 400, 600, 800
Additional functions	
Default program duration (Min)	01:07
Laundry type / descriptions	Hand or machine-washable wool or richwool textiles. Especially gentle wash programme to prevent shrinkage, longer programme pauses (textiles rest in wash liquor)
Sport Wear	
Washing temperature	Cold, 20°C, 40°C
Maximum dry laundry amount	5 kg
Spin speed selection(rpm)	0, 400, 600, 800, 1000, 1200, 1400
Additional functions	
Default program duration (Min)	00:47
Laundry type / descriptions	Washing the activewear.
Rapid 45’	
Washing temperature	Cold, 20°C, 40°C
Maximum dry laundry amount	2 kg
Spin speed selection(rpm)	0, 400, 600, 800, 1000, 1200
Additional functions	
Default program duration (Min)	00:45
Laundry type / descriptions	Washing few and not very dirty clothes quickly.

Quick 15’	
Washing temperature	Cold, 20°C
Maximum dry laundry amount	2 kg
Spin speed selection(rpm)	0, 400, 600, 800
Additional functions	
Default program duration (Min)	00:15
Laundry type / descriptions	Extra short programme approx, suitable for lightly soiled washing as a small amount of laundry

Speed **Spin Speed**

When needed, the spinning speed can be adjusted by pressing the Speed button in the following steps:
1300: 0-400-600-800-1000-1200-1400

Delay **Delay**

Set the Delay function:
1. Select a program.
2.Press the Delay button to choose the time (the delay time is 0-24h).
3.Press [Start/Pause] to commence the delay operation

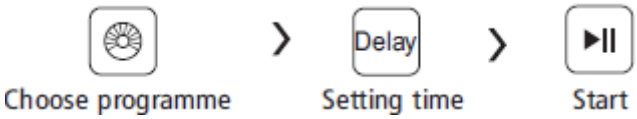

Cancel the Delay function: Press the [Delay] button until the display light is off.
It should be pressed before starting the program.
If the program has already started, you should switch off the program to reset it to a new one.

Pre-Wash

Extra washing function before the main washing cycle starts to increase the washing performance. Note: Detergent needs to be added to compartment I.

Extra Rinse

The laundry will undergo an extra rinse after selecting this function.

Temp. **Temp**.

When needed, the washing temperature can be adjusted by pressing the temperature button in the following steps: Cold - 20°C - 40°C - 60°C - 90°C.

Drum Clean

After the machine runs to the set counting period (counting cycle is 25 times), Drum Clean lamp flashes at the end of the last program, reminding the user to run the program; Release condition:
1.Press and hold the Drum Clean button for 3s, Drum Clean reminder will be canceled and washing cycles will be recounted for another 25 cycles.
2.The counted cycles will be recounted when drum clean program is finished.

Child Lock

This function is meant to keep children from misusing the controls.

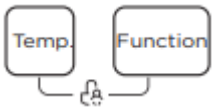

Press [Temp.] and [Function] simultaneously for 3 sec until the buzzer beep. The child lock indicator switches on.
When the Child Lock is activated, the display will alternately show “CL” and the remaining time.
Pressing any other button will cause the Child Lock indicator to flash.
When the program ends, “CL” and “END” will alternate on the display.
The Child Lock deactivates the function of all buttons except the On/Off button and the Child lock button!
Only the simultaneous pressing of the two buttons [Temp] and [Function] can deactivate the Child Lock!
Please deactivate the Child Lock before selecting a new program!

Mute the buzzer

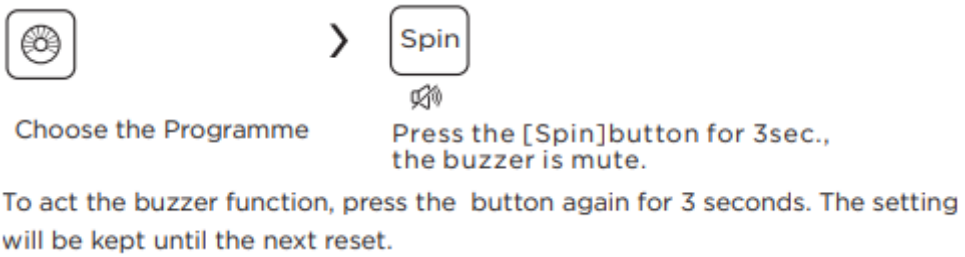

CAUTION

• After Muting the buzzer function, the sounds will not be activated any more

Reload

This operation can be executed during the washing progress. When the drum is still rolling and there is a large amount of water with high temperature in the drum. The state is unsafe, and the door cannot be opened forcefully. To Press [Reload]3sec. to reload, and start the clothes adding in the midway function.
Please follow the steps below:
1.Wait until the drum stops rotation.
2.The door lock is unlocked.
3.Close the door when the clothes are reloaded and press the [Start/Pause] button

8. MAINTENANCE

Cleaning and Care

WARNING
• Always unplug the appliance and close the water tap before cleaning and maintenance.

Cleaning the Cabinet
Proper maintenance on the machine can extend its working life. The surface can be cleaned with diluted nonabrasive neutral detergents when necessary. If there is any water overflow, use a towel to wipe it off immediately. Never use sharp items to clean the appliance.

CAUTION
• Never use abrasive or caustic agents. Such as formic acids or diluted solvents or similar substances, like alcohol or chemical products.

Cleaning the Drum
Any rust stains left inside the drum by metal articles must be removed immediately using chlorine-free detergents. Never use steel wool for cleaning the drum!

Cleaning the Door Seal and Glass
Wipe the glass and seal after each washing to remove lint and stains. If lint builds up it can cause leakages. Remove any coins, buttons and other objects from the seal after each wash. Clean the door seal and glass every month to ensure the normal operation of the appliance

Cleaning the Inlet Filter

1. Close the tap and remove the water supply hose from it.

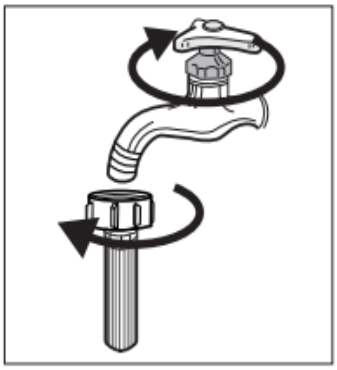

2. Clean the filter with a brush.



3. Unscrew the water supply hose from the backside of the machine.
Pull out the filter with long nose pliers.

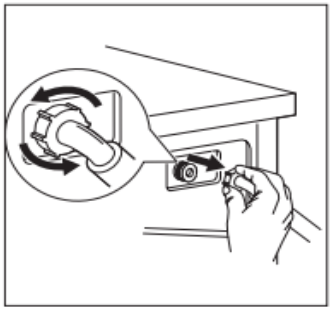

4. Use a brush to clean the filter.

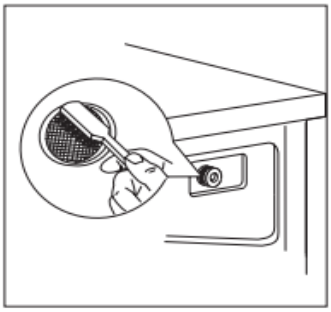

5. Reinstall the filter to the water inlet and reconnect the water supply hose.
6. Clean the Inlet filter every 3 months to ensure the normal operation of the appliance.

Cleaning the Detergent Dispenser

1. Press down the release [ ] on the softener cover and pull the dispenser drawer out of the recess. Clean the inside of the recess with a brush.
2. Lift the softener cover off the dispenser drawer and wash both items with water.
3. Restore the softener cover and push the drawer back into the recess.

1. Press the release and remove the dispenser drawer

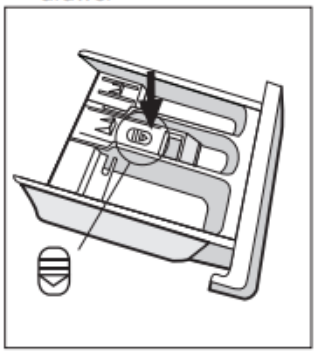

2. Clean the dispenser drawer and the softener cover under water

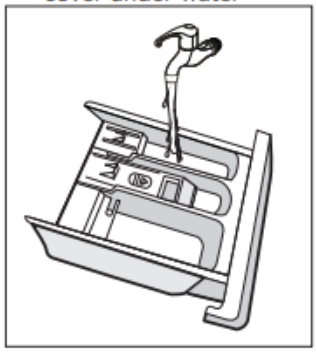

3. Clean the recess with a soft brush

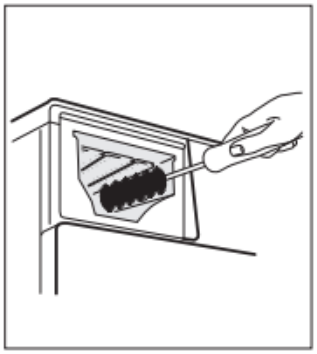

4. Insert the dispenser drawer

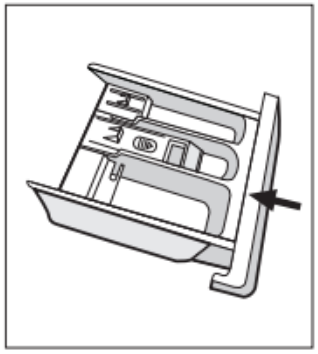

Cleaning the Drain Pump Filter

• Make sure that the machine has finished the washing cycle and is empty. Switch it off and unplug it before cleaning the drain pump filter.
• Be careful of hot water. Allow the water to cool down. Risk of scalding!
• Clean the filter periodically every 3 months to ensure the normal operation of the appliance.

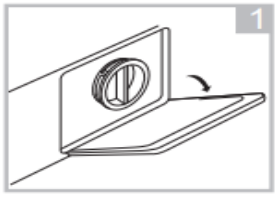

Open the lower cover cap



Open the filter by turning to the counter clockwise



Remove extraneous matter

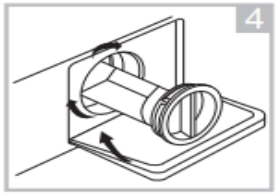

Close the lower cover cap

9. TROUBLESHOOTING

The start of the appliance does not work, or it stops during operation. First try to find a solution to the problem, If not, contact the service center.

Description	Possible Cause	Solution
Appliance does not start	The door is not closed properly. Clothes are stuck.	Close the door properly and restart. Check the laundry.
Door can´t be opened	Safety protection is activated.	Disconnect the power and restart
Water leakage	Connections are not tight enough.	Check and fasten the water inlet pipe. Check and clean the outlet hose.
Detergent residues in the detergent dispenser	Detergent is damp and/or clotted.	Clean and wipe the detergent dispenser dry.
Indicator or display does not work	PC board or harness have connection problems.	Switch off the power and check if the mains plug is connected properly.
Abnormal noise	Fixing bolts are still in place. The floor is not solid or level.	Check if the fixing bolts have been removed. Make sure the appliance is installed on a solid and level floor.

Description	Possible Cause	Solution
E30	Door is not closed properly.	Close the door properly and restart
E10	Water injecting problem during wash cycle.	Check if the water pressure is high enough. Straighten the water pipe. Clean the inlet valve filter.
E21	Overtime water draining	Check the drain hose for blockage.
E12	Water overflow	Restart the appliance
EXX	Others	Restart the appliance. If problem persists, please contact the customer service.

IMPORTANT STEPS WHEN MOVING THE APPLIANCE

- Check if the door and the detergent dispenser are closed properly.
- Remove the water inlet pipe and the outlet hose from the house installations.
- Let the water drain completely from the appliance
- Important: Re-install the 4 transport bolts in the back of the appliance.
- This appliance is heavy.

Transport with care.
Never hold any protruding part of the machine when lifting.
The machine door cannot be used as a handle.

TECHNICAL DATA

The technical information is situated in the rating plate on the internal side of the appliance and on the energy label.
The QR code on the energy label supplied with the appliance provides a web link to the information related to the performance of the appliance in the EU EPREL database.
Keep the energy label for reference together with the user manual and all other documents provided with this appliance.
It is also possible to find the same information in EPREL using the link https:// eprel.ec.europa.eu and the model name and product number that you find on the rating plate of the appliance.
To access information about your product in the EPREL portal, you can scan the codes below:

Thank you for purchasing this product. If you need support with your product, visit our website using the links below.
Get User manuals: https://www.heinner.ro
Get Service information: https://www.heinner.ro

Environment friendly disposal

You can help protect the environment!

Please remember to respect the local regulations: hand in the non-working electrical equipment's to an appropriate waste disposal center.

HEINNER is a registered trademark of **Network One Distribution SRL**. Other brands and product names are trademarks or registered trademarks of their respective holders.

No part of the specifications may be reproduced in any form or by any means or used to make any derivative such as translation, transformation, or adaptation without permission from NETWORK ONE DISTRIBUTION.

Copyright © 2013 Network One Distribution. All rights reserved.

www.heinner.com, http://www.nod.ro

This product is in conformity with the norms and standards of European Community

Importer: **Network One Distribution**

Marcel Iancu Street, 3-5, Bucharest, Romania

Tel: +40 21 211 18 56, www.heinner.com , www.nod.ro